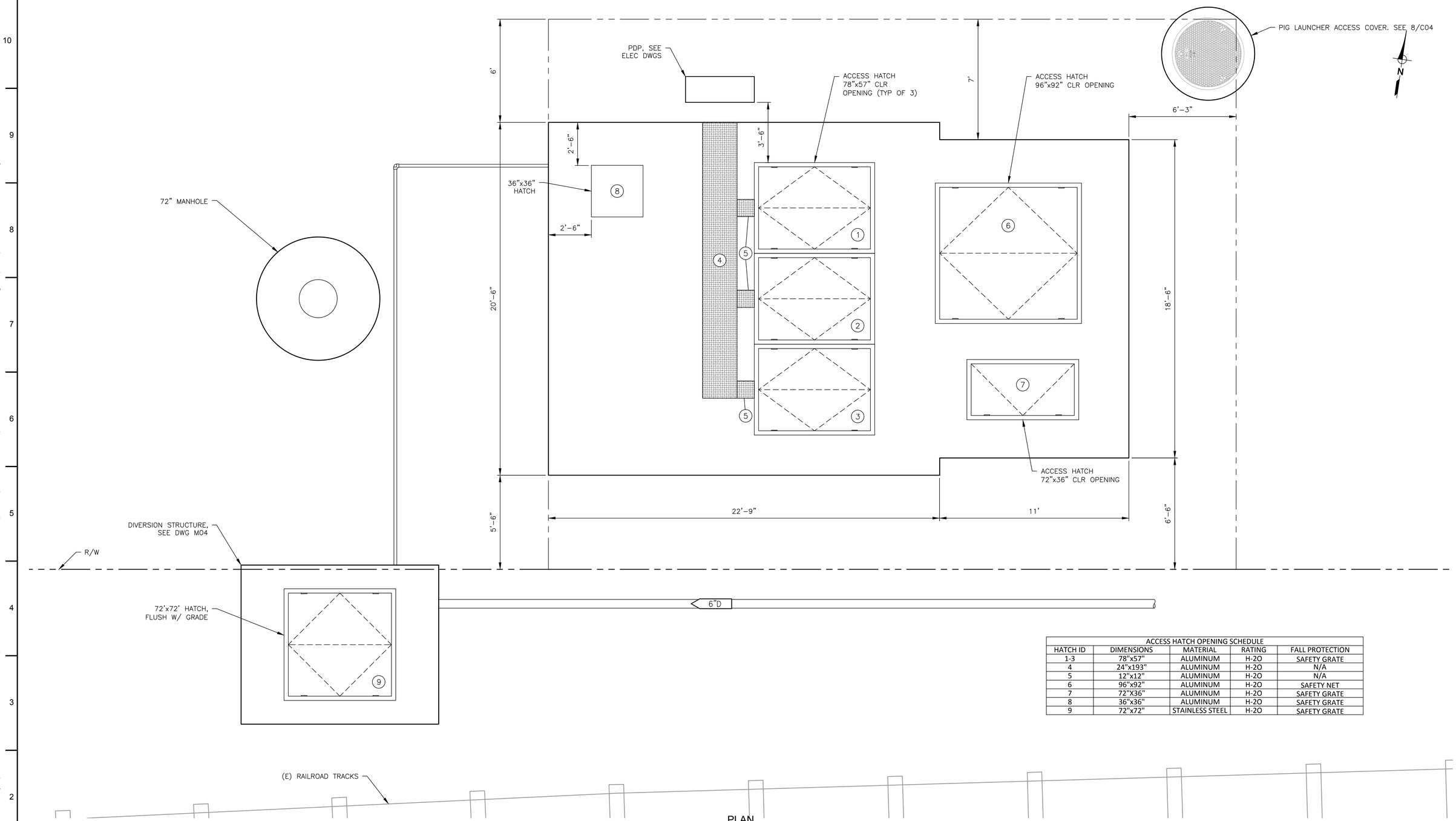

ACCESS HATCH OPENING SCHEDULE				
HATCH ID	DIMENSIONS	MATERIAL	RATING	FALL PROTECTION
1-3	78"x57"	ALUMINUM	H-20	SAFETY GRATE
4	24"x193"	ALUMINUM	H-20	N/A
5	12"x12"	ALUMINUM	H-20	N/A
6	96"x92"	ALUMINUM	H-20	SAFETY NET
7	72"X36"	ALUMINUM	H-20	SAFETY GRATE
8	36"x36"	ALUMINUM	H-20	SAFETY GRATE
9	72"x72"	STAINLESS STEEL	H-20	SAFETY GRATE

PLAN

SCALE: 3/8" = 1'-0"

REGISTERED PROFESSIONAL ENGINEER
86320PE
Digitally Signed
OREGON
DEC. 12, 2018
MATTHEW P. HEWITT
EXPIRES : 6/30/2019

QC REVIEW: _____

DATE: _____

THIS LINE IS 1 INCH
AT FULL SCALE
IF NOT SCALE ACCORDINGLY

SCALE : AS SHOWN
DRAWN BY : DKH
DESIGNED BY : NEW/DAM
PROJ. MGR. : WJM

No.	ZONE	REVISIONS	BY	DATE

WEST YOST ASSOCIATES
4949 Meadows Road
Suite 125
Lake Oswego, Oregon 97035
(503) 451-4500
FAX (530) 756-4991

CITY OF ALBANY
OREGON
Est. 1850

CITY OF ALBANY
RIVERFRONT INTERCEPTOR SEWER
LIFT STATION AND FORCE MAIN

LIFT STATION
GROUND LEVEL TOP SLAB

JOB NUMBER 519-14-18-18
DRAWING NUMBER **M01**
SHEET NUMBER 35 OF 59
REVISION

P:\Clients\519 City of Albany\14-18-18 Rvrfrnt Intrcptr Wet Wthr LS and FM\CAD\Production\51914-1818-M01-M05.dwg 4/16/2019 4:12 PM jham

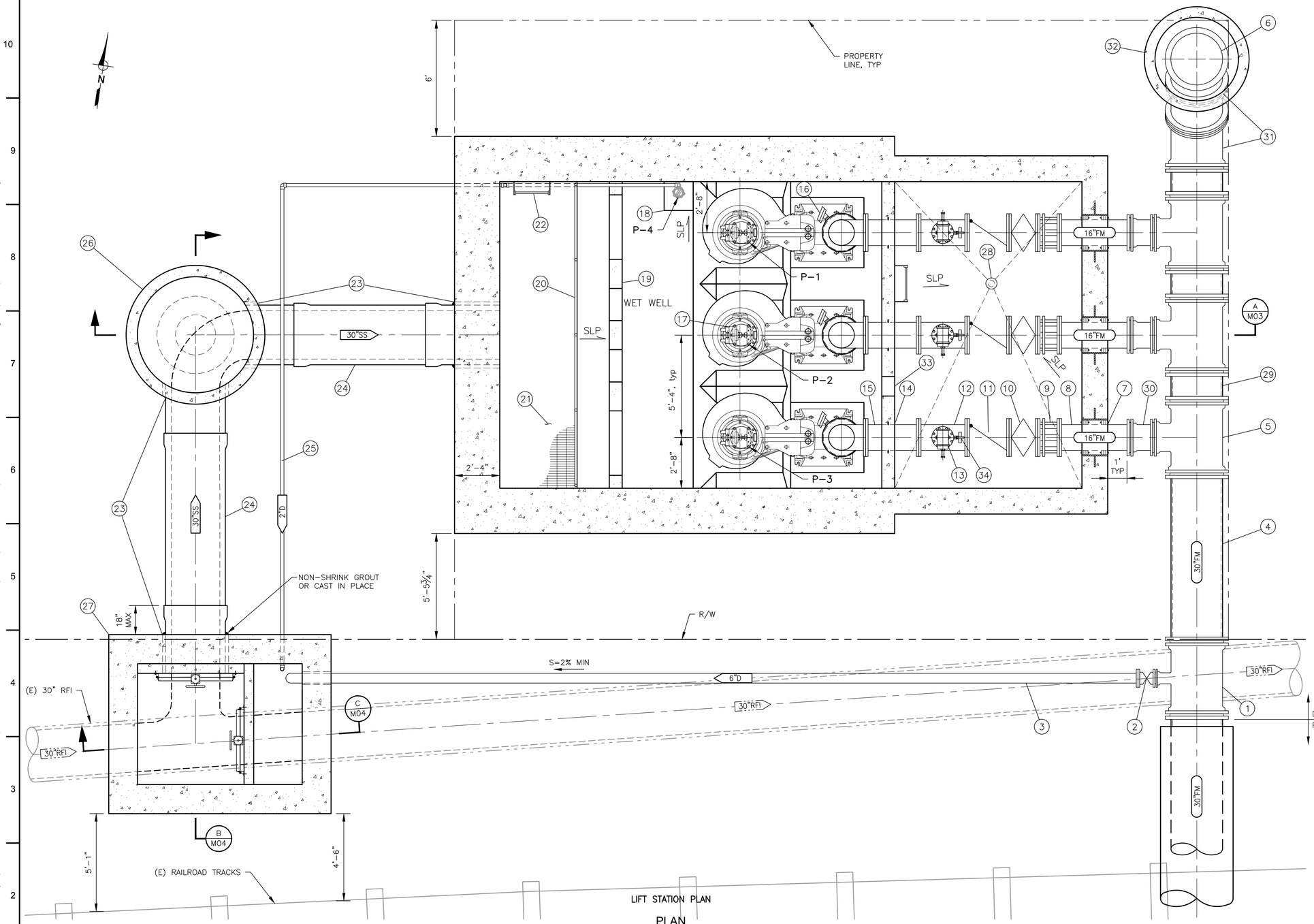

LIFT STATION PLAN

PLAN

SCALE: 3/8" = 1'-0"

MATERIAL LIST

1. 30"x6" DI REDUCING TEE, MJ
2. 6" GV, MJxFLG
3. 6" DRAIN, DI
4. 30" FM, DI
5. 30"x16" DI REDUCING TEE (TYP OF 3), MJ, (RESTRAINED)
6. BLIND FLANGE CONNECTION FOR PIG LAUNCHER, SEE DET 8, DWG C04
7. TYPE 'A' PIPE WALL PENETRATION (TYP OF 3), SEE DET 1, DWG C04
8. 16" DI (TYPE OF 3), FLGxPE
9. 16" DISMANTLING JOINT (TYP OF 3)
10. 16" PV, FLG (TYP OF 3)
11. 16" SWING CV, FLG (TYP OF 3)
12. 16"x6" DI REDUCING TEE, FLG (TYP OF 3)
13. 6" WASTEWATER COMBINATION AIR VALVE (TYP OF 3)
14. TYPE 'B' PIPE WALL PENETRATION (TYP OF 3), SEE DET 2, DWG C04
15. 16" CAST-IN-PLACE WALL PIPE (TYP OF 3), FLG
16. 16" FLOW METER (TYP OF 3)
17. SUBMERSIBLE SEWAGE PUMP (TYP OF 3)
18. 18"x18"x12" SUMP & P-4, DET 6, DWG M06
19. INTERIOR BAFFLE WALL, TYP
20. HANDRAIL, SEE DWG S07
21. ALUMINUM CATWALK
22. ACCESS LADDER, SEE DWG S07
23. WALL PENETRATION, GROUT OR CAST IN PLACE
24. 30" SS, CONCRETE
25. 2" SUMP DRAIN
26. 72" MANHOLE
27. DIVERSION STRUCTURE, SEE DWG M04
28. FLOOR DRAIN
29. 30" DI SPL, (TYP OF 3)
30. 16" DI, MJ (TYP OF 3)
31. 30" DI 45° BEND, MJ (2)
32. 48" MANHOLE SECTION
33. 12" x12" VENT OPENING, BOTTOM EL = 194.5'
34. PRESSURE INDICATING TRANSMITTER GAUGE ASSEMBLY, TYP, SEE DET 5, DWG M06

NOTES

1. INSTALL CP ANODES ON 30" D.I. PIPE AS SHOWN ON DRAWING C03. SEE DETAIL 3 DRAWING C08.
2. JOINT BOND ALL BURIED DIP JOINTS. SEE DETAIL 2 ON DRAWING C08.
3. SHORING SYSTEMS SHALL NOT INTERFERE WITH NIGHTLY TRAIN OPERATION. SHORING SYSTEM FOR SOUTH SIDE OF DIVERSION STRUCTURE SHALL BE FLUSH WITH GROUND SURFACE EACH NIGHT TO MAINTAIN CLEAR AND UNOBSTRUCTED PATH FOR TRAIN OPERATION.

REGISTERED PROFESSIONAL ENGINEER
86320PE
Digitally Signed
OREGON
Dec. 12, 2018
MATTHEW P. HEWITT
EXPIRES : 6/30/2019

QC REVIEW: _____

DATE: _____

THIS LINE IS 1 INCH
AT FULL SCALE
IF NOT SCALE ACCORDINGLY

SCALE : AS SHOWN
DRAWN BY : DKH
DESIGNED BY : NEW/DAM
PROJ. MGR. : WJM

No.	ZONE	REVISIONS	BY	DATE

WEST YOST ASSOCIATES
4949 Meadows Road
Suite 125
Lake Oswego, Oregon 97035
(503) 451-4500
FAX (530) 756-4991

CITY OF ALBANY
OREGON
Inc. 1864

CITY OF ALBANY
RIVERFRONT INTERCEPTOR SEWER
LIFT STATION AND FORCE MAIN

LIFT STATION
MECHANICAL PLAN

JOB NUMBER 519-14-18-18
DRAWING NUMBER **M02**
SHEET NUMBER 36 OF 59
REVISION

P:\Clients\519 City of Albany\14-18-18 Rvrfrnt Intrcptr Wet Wthr LS and FM\CAD\Production\51914-1818-M01-M05.dwg 4/16/2019 4:12 PM jham

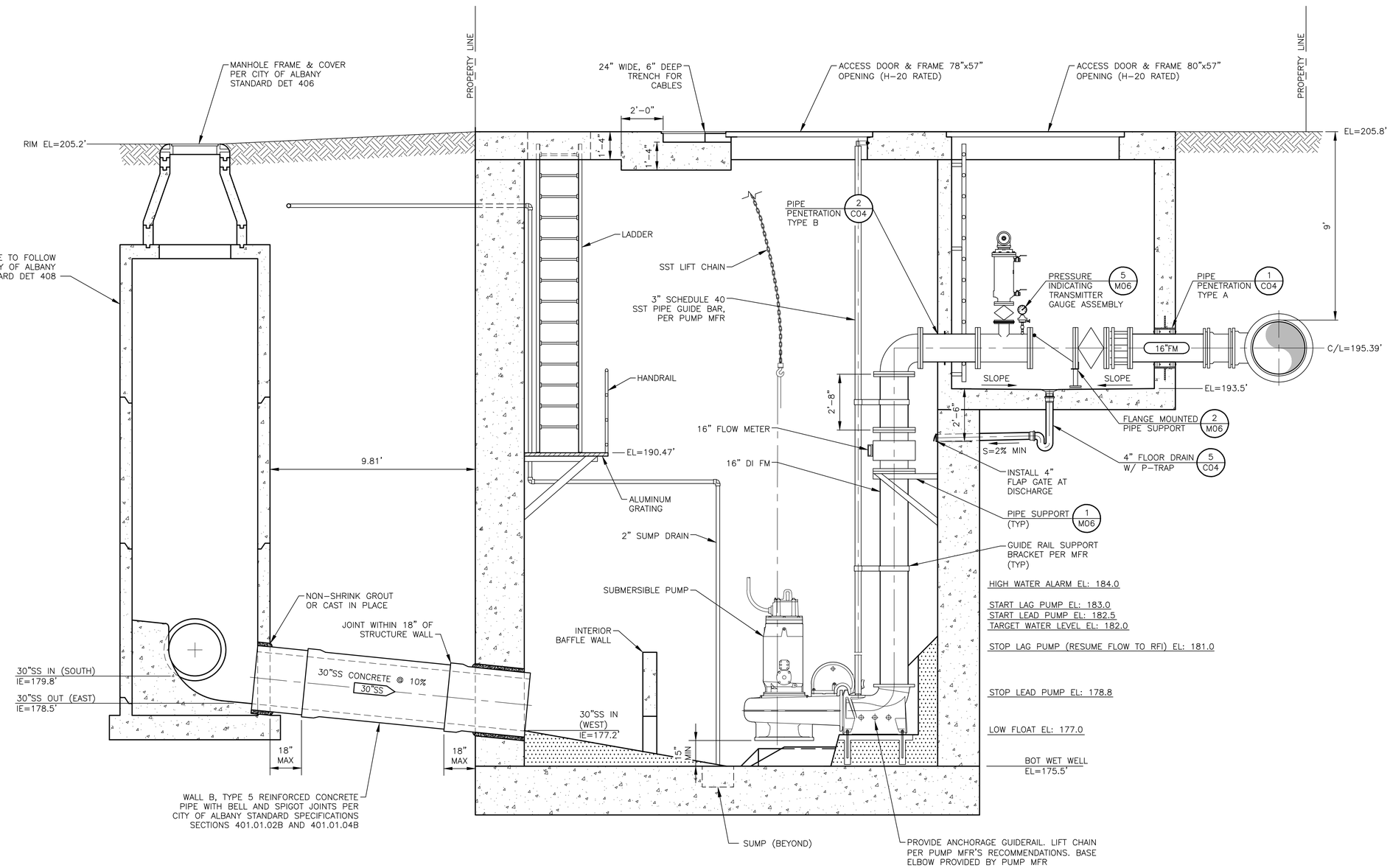

LIFT STATION SECTION

SECTION A / M01

SCALE: 3/8"=1'-0"

REGISTERED PROFESSIONAL ENGINEER
86320PE
Digitally Signed
OREGON
DEC. 12, 2018
MATTHEW P. HEWITT
EXPIRES : 6/30/2019

QC REVIEW: _____

DATE: _____

THIS LINE IS 1 INCH
AT FULL SCALE
IF NOT SCALE ACCORDINGLY

SCALE : AS SHOWN
DRAWN BY : DKH
DESIGNED BY : NEW/DAM
PROJ. MGR. : WJM

No.	ZONE	REVISIONS	BY	DATE

WEST YOST ASSOCIATES
4949 Meadows Road
Suite 125
Lake Oswego, Oregon 97035
(503) 451-4500
FAX (530) 756-4991

CITY OF ALBANY
RIVERFRONT INTERCEPTOR SEWER
LIFT STATION AND FORCE MAIN

LIFT STATION
SECTION VIEW

JOB NUMBER 519-14-18-18
DRAWING NUMBER M03
SHEET NUMBER 37 OF 59
REVISION

P:\Clients\519 City of Albany\14-18-18 Rvrfrnt Intrcptr Wet Wthr LS and FM\CAD\Production\51914-1818-M01-M05.dwg 4/16/2019 4:12 PM jhom

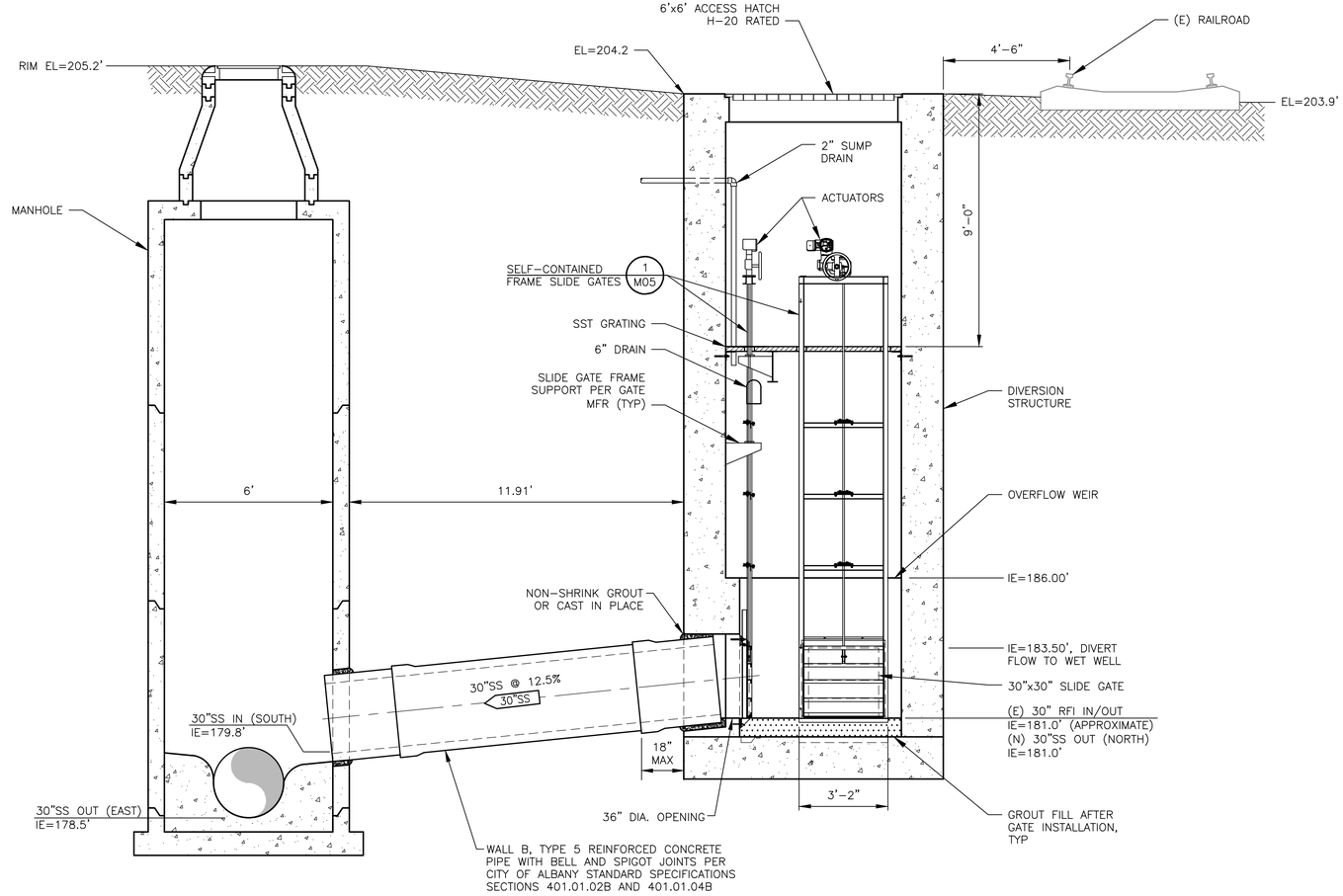

DIVERSION STRUCTURE

SECTION B / M01

SCALE: 3/8"=1'-0"

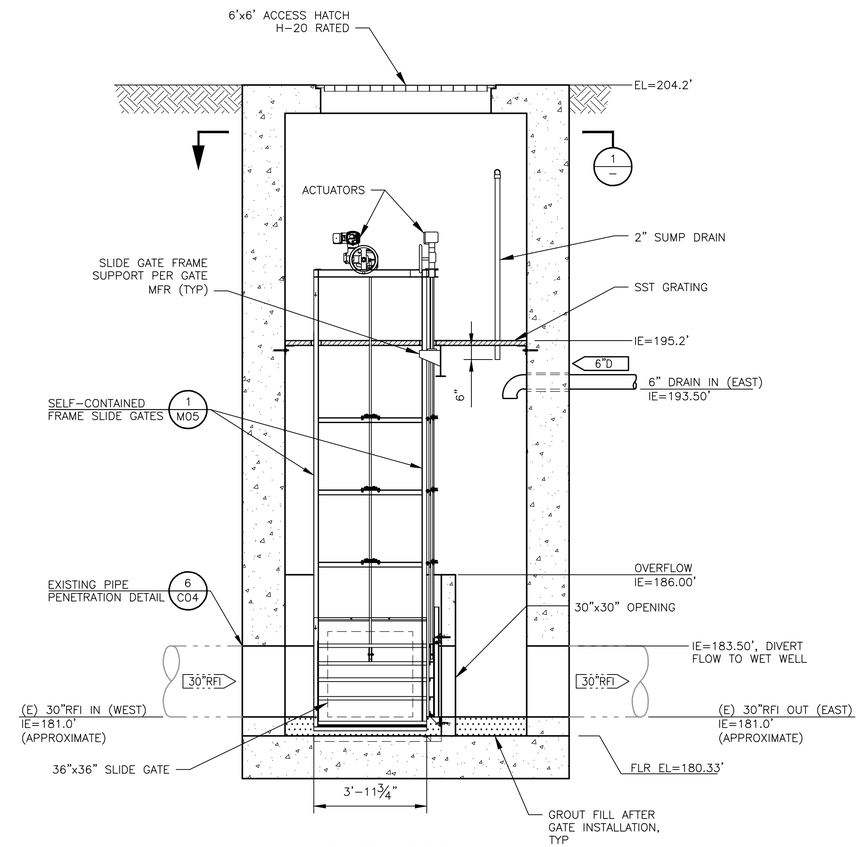

DIVERSION STRUCTURE

SECTION C / M01

SCALE: 3/8"=1'-0"

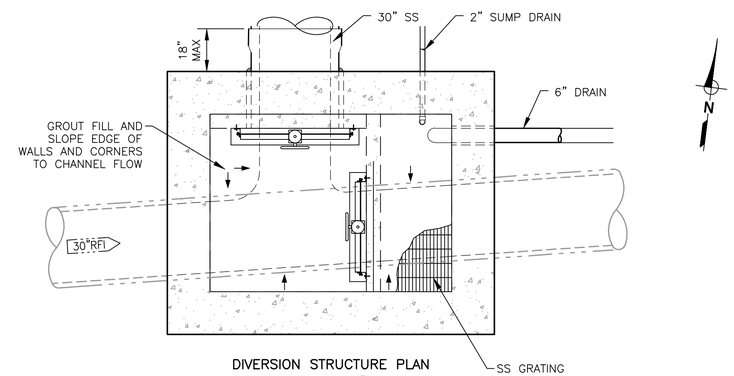

DIVERSION STRUCTURE PLAN

DETAIL 1 / –

SCALE: 3/8"=1'-0"

REGISTERED PROFESSIONAL ENGINEER
86320PE
Digitally Signed
OREGON
Dec. 12, 2018
MATTHEW P. HEWITT
EXPIRES : 6/30/2019

QC REVIEW: _____

DATE: _____

THIS LINE IS 1 INCH
AT FULL SCALE
IF NOT SCALE ACCORDINGLY

SCALE : AS SHOWN
DRAWN BY : DKH
DESIGNED BY : NEW/DAM
PROJ. MGR. : WJM

No.	ZONE	REVISIONS	BY	DATE

WEST YOST ASSOCIATES

4949 Meadows Road
Suite 125
Lake Oswego, Oregon 97035
(503) 451-4500
FAX (530) 756-4991

CITY OF ALBANY
OREGON
Est. 1850

CITY OF ALBANY
RIVERFRONT INTERCEPTOR SEWER
LIFT STATION AND FORCE MAIN

DIVERSION STRUCTURE
SECTIONS

JOB NUMBER
519-14-18-18

DRAWING NUMBER
M04

SHEET NUMBER
38 OF 59

REVISION

P:\Clients\519 City of Albany\14-18-18 Rvrfrnt Intrcptr Wet Wthr LS and FM\CAD\Production\51914-1818-M01-M05.dwg 4/16/2019 4:12 PM jhom

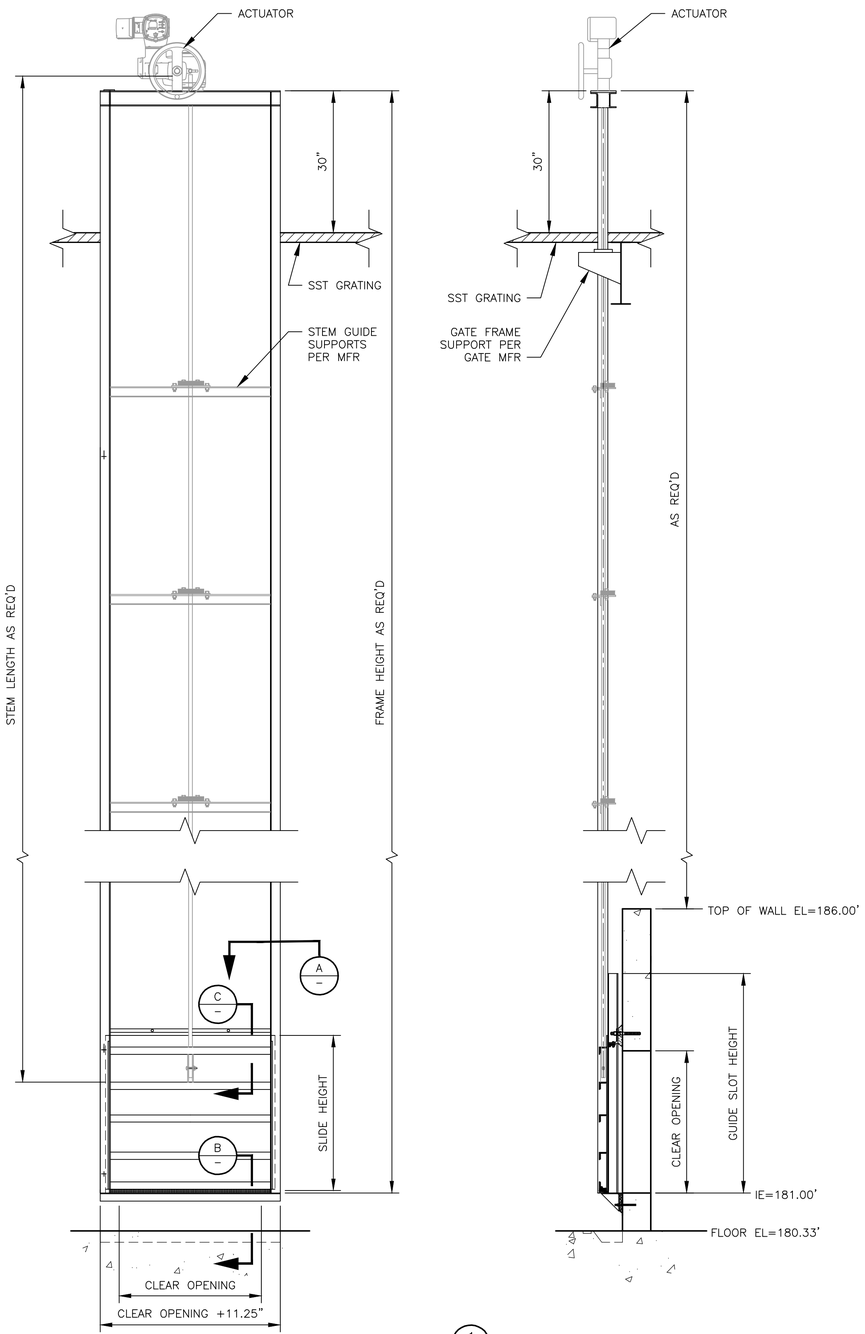

DETAIL 1/M04

SCALE: NOT TO SCALE

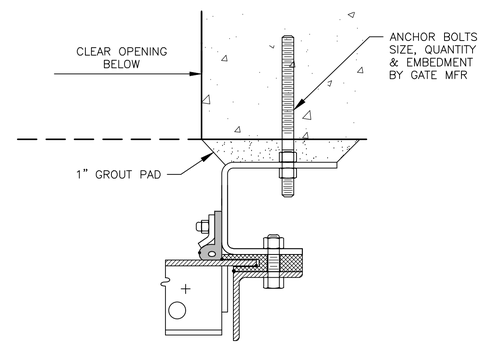

SECTION A/–

SCALE: NOT TO SCALE

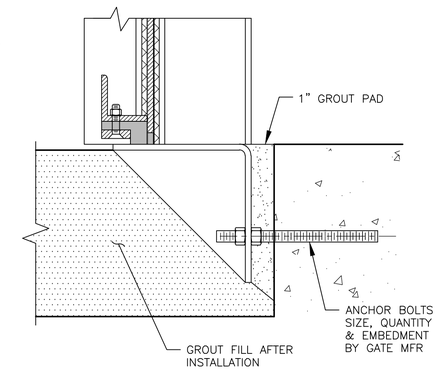

SECTION B/–

SCALE: NOT TO SCALE

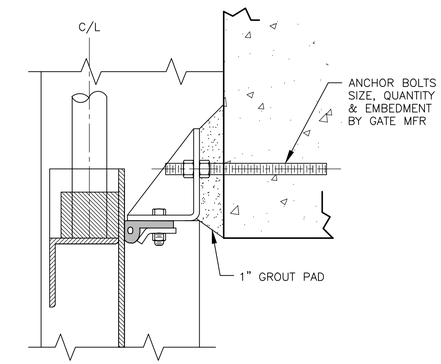

SECTION C/–

SCALE: NOT TO SCALE

REGISTERED PROFESSIONAL ENGINEER
86320PE
Digitally Signed
OREGON
DEC. 12, 2012
MATTHEW P. HEWITT
Digitally Signed
EXPIRES : 6/30/2019

QC REVIEW: _____

DATE: _____

THIS LINE IS 1 INCH
AT FULL SCALE
IF NOT SCALE ACCORDINGLY

SCALE : AS SHOWN
DRAWN BY : DKH
DESIGNED BY : NEW/DAM
PROJ. MGR. : WJM

No.	ZONE	REVISIONS	BY	DATE

WEST YOST ASSOCIATES
4949 Meadows Road
Suite 125
Lake Oswego, Oregon 97035
(503) 451-4500
FAX (530) 756-4991

CITY OF ALBANY
RIVERFRONT INTERCEPTOR SEWER
LIFT STATION AND FORCE MAIN

SLIDE GATE DETAILS

JOB NUMBER 519-14-18-18
DRAWING NUMBER **M05**
SHEET NUMBER 39 OF 59
REVISION

P:\Clients\519 City of Albany\14-18-18 Rvrfrnt Intrcptr Wet Wthr LS and FM\CAD\Production\51914-1818-M01-M05.dwg 4/15/2019 11:29 AM jham

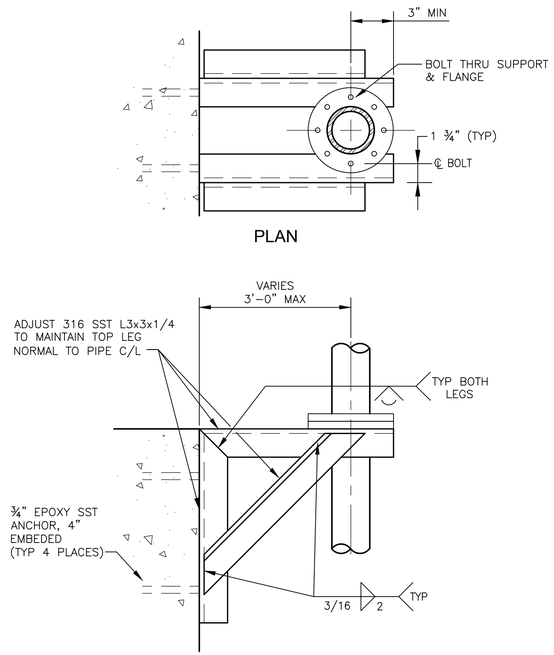

PIPE HANGER

DETAIL 1/TYP

NOT TO SCALE

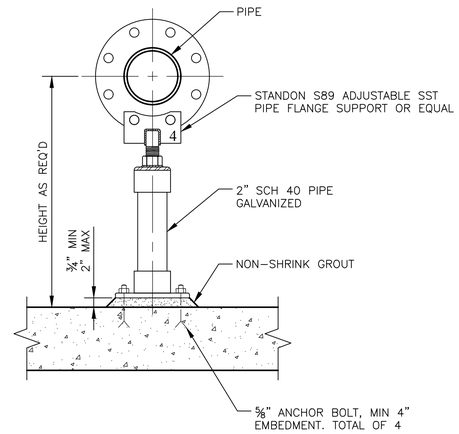

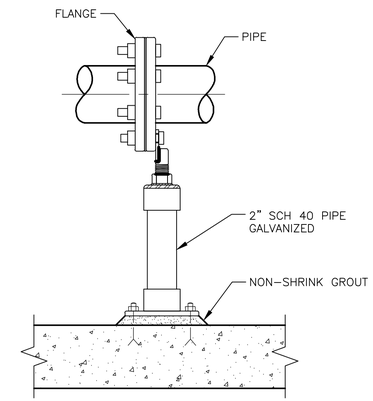

NOTES:

1. ALL COMPONENTS SHALL BE TYPE 316 STAINLESS STEEL UNLESS OTHERWISE NOTED.

PIPE SUPPORT – FLANGE MOUNTED

DETAIL 2/TYP

NOT TO SCALE

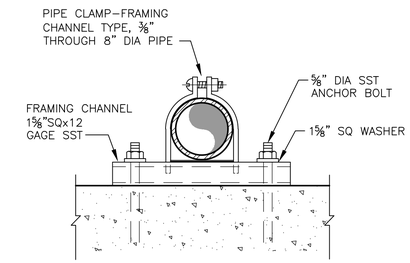

PIPE SUPPORT WALL MOUNT WITH STRUCTURAL ATTACHMENT 3/8" THROUGH 8" PIPE

DETAIL 3/TYP

NOT TO SCALE

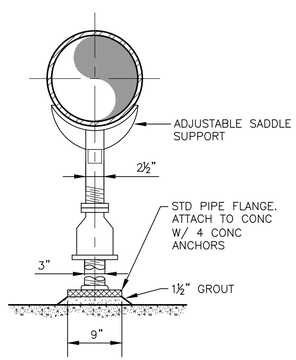

PIPE SUPPORT

DETAIL 4/TYP

NOT TO SCALE

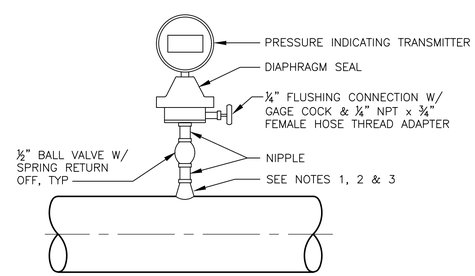

NOTES:

1. FOR STEEL GSP OR PVC 2–½" AND SMALLER USE A TEE WITH BUSHING.
2. FOR DI OR FRP ALL SIZES, USE PIPE SADDLE WITH BUSHING.
3. FOR STEEL OR STAINLESS STEEL PIPES 3" AND LARGER, AND PRESSURE VESSELS, USE THREAD–O–LET OR EQUAL AS SHOWN.
4. DIAPHRAGM SEAL – PRESSURE INDICATING TRANSMITTER ASSEMBLY TO BE FACTORY ASSEMBLED.

PRESSURE INDICATING TRANSMITTER

DETAIL 5/TYP

NOT TO SCALE

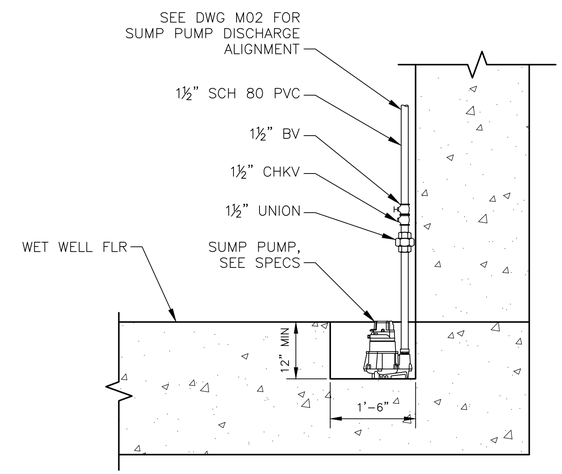

NOTES:

1. PROVIDE ANCHORS AS NECESSARY TO SUPPORT SUMP PUMP DISCHARGE PIPING.

SUMP DETAIL

DETAIL 6/M02

NOT TO SCALE

REGISTERED PROFESSIONAL ENGINEER 86320PE Digitally Signed OREGON DEC. 12, 2012 MATTHEW P. HEWITT Digitally Signed

EXPIRES : 6/30/2019

QC REVIEW: _____

DATE: _____

THIS LINE IS 1 INCH

AT FULL SCALE IF NOT SCALE ACCORDINGLY

SCALE : AS SHOWN
DRAWN BY : SMB
DESIGNED BY : NEW/DAM
PROJ. MGR. : WJM

No.	ZONE	REVISIONS	BY	DATE

WEST YOST ASSOCIATES

4949 Meadows Road
Suite 125
Lake Oswego, Oregon 97035
(503) 451-4500
FAX (530) 756-4991

CITY OF ALBANY • OREGON • Est. 1850

CITY OF ALBANY
RIVERFRONT INTERCEPTOR SEWER
LIFT STATION AND FORCE MAIN

MECHANICAL DETAILS

JOB NUMBER 519–14–18–18

DRAWING NUMBER **M06**

SHEET NUMBER 40 OF 59

REVISION

P:\Clients\519 City of Albany\14-18-18 Rvrfrnt Intrcptr Wet Wthr LS and FM\CAD\Production\51914-1818-M06.dwg 4/15/2019 11:34 AM jham