FOUNDATION PLAN NOTES:

1. ALL FOOTINGS SHALL BEAR ON SOIL PREPARED TO THE SATISFACTION OF THE PROJECT GEOTECHNICAL ENGINEER. CONTACT GEOTECHNICAL ENGINEER PRIOR TO PLACING ANY MATERIAL.
2. EXCAVATIONS SHALL COMPLY WITH OSHA REQUIREMENTS AND ANY OTHER GOVERNING AGENCY. AT NO TIME SHALL THE CONTRACTOR ALLOW UNSAFE CONDITIONS DURING CONSTRUCTION.
3. SEE MECHANICAL DRAWINGS FOR LOCATION AND DIMENSION OF OPENINGS.
4. SEE CIVIL DRAWINGS FOR EXTERIOR SLABS NOT PART OF THE STRUCTURE.
5. DO NOT WET SET ANCHOR BOLTS, REINFORCING OR OTHER ITEMS TO BE EMBEDDED IN CONCRETE.

GENERAL NOTES:

1. THE GENERAL CONTRACTOR IS RESPONSIBLE FOR VERIFICATION AND CORRELATION OF ALL DIMENSIONS, ELEVATIONS AND OPENINGS ON THE STRUCTURAL DRAWINGS WITH THE ARCHITECTURAL DRAWINGS. NOTIFY THE ARCHITECT OF ANY DISCREPANCIES PRIOR TO STARTING CONSTRUCTION.
2. PLANS AND CALCULATIONS FOR THE STRUCTURAL DESIGN WERE BASED UPON:
   – THE 2014 OREGON STRUCTURAL SPECIALTY CODE
3. DESIGN LOADS ARE AS FOLLOWS:
   FLOOR LIVE LOAD: 100 PSF
   FOUNDATION:
   PREPARE SITE SOIL IN ACCORDANCE WITH THE RECOMMENDATIONS OF A GEOTECHNICAL ENGINEER.
4. THE STRUCTURAL DRAWINGS DO NOT REFLECT ALL OPENINGS THAT MAY BE REQUIRED FOR DUCTS, PIPES OR CONDUITS. IT IS THE RESPONSIBILITY OF THE CONTRACTOR TO COORDINATE OPENINGS WITH STRUCTURAL REQUIREMENTS.
5. THE STRUCTURAL DOCUMENTS REPRESENT THE FINAL STRUCTURE AND UNLESS SPECIFICALLY INDICATED THEY DO NOT SPECIFY THE METHOD OF CONSTRUCTION.

SPECIAL INSPECTIONS:

FOUNDATION:
- CONTINUOUS: DRIVEN DEEP FOUNDATION ELEMENTS.
- PERIODIC: FOUNDATION EXCAVATED SURFACE, PLACEMENT & COMPACTION OF FILL.

CONCRETE:
- CONTINUOUS: CONCRETE COMPRESSIVE STRENGTH, TEMPERATURE, SLUMP, AIR CONTENT.
- PERIODIC: REINFORCING STEEL PLACEMENT, BOLTS CAST IN IN CONCRETE, ANCHORS INSTALLED IN HARDENED CONCRETE, MIX DESIGN, CURING, FORMWORK.

MASONRY:
- CONTINUOUS: NONE
- PERIODIC: PROPORTIONS OF SITE PREPARED MORTAR, MORTAR JOINTS, GROUT SPACE, LOCATION & GRADE & TYPE & SIZE OF REINFORCING STEEL & ANCHOR BOLTS, PROPORTIONS OF SITE PREPARED GROUT, CONSTRUCTION OF MORTAR JOINTS, PLACEMENT OF GROUT, PREPARATION OF GROUT & MORTAR PRISMS.

STEEL:
- CONTINUOUS: COMPLETE & PARTIAL PENETRATION GROOVE WELDS. MULTIPLE PASS FILLET WELDS, SINGLE PASS FILLET WELDS LARGER THAN 5/16".
- PERIODIC: HIGH STRENGTH BOLTING, SINGLE PASS FILLET WELDS 5/16" AND SMALLER.

WOOD:
NONE

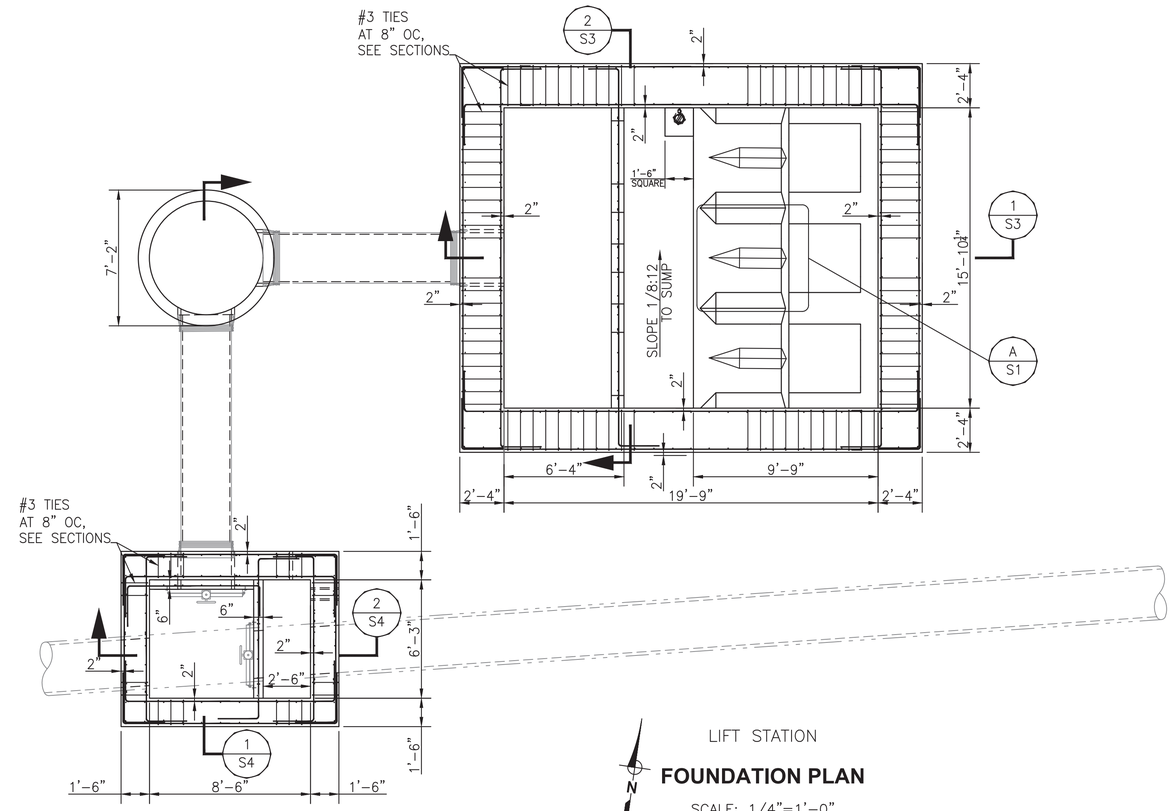

LIFT STATION

FOUNDATION PLAN

SCALE: 1/4"=1'-0"

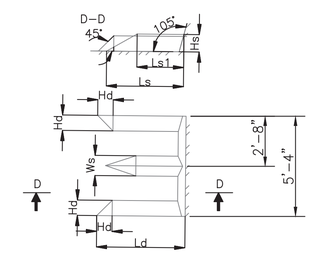

Pump	Ls	Ls1	Hs	Ws	Ld	Hd
P1	4'–0 13/16"	2'–5 9/16"	11 "	1'–0 11/16"	4'–7 15/16"	9 11/16"
P2	4'–0 13/16"	2'–5 9/16"	11 "	1'–0 11/16"	4'–7 15/16"	9 11/16"
P3	4'–0 13/16"	2'–5 9/16"	11 "	1'–0 11/16"	4'–7 15/16"	9 11/16"

DETAIL A/S1

SCALE: NONE

REGISTERED PROFESSIONAL ENGINEER 64239PE DIGITALLY SIGNED OREGON MAY 9, 2000 ALLAN T GOFF EXPIRES 6/30/2019

QC REVIEW: _____

DATE: _____

THIS LINE IS 1 INCH
AT FULL SCALE
IF NOT SCALE ACCORDINGLY

SCALE : AS SHOWN
DRAWN BY : ATG
DESIGNED BY : ATG
PROJ. MGR. : WJM

No.	ZONE	REVISIONS	BY	DATE

WEST YOST ASSOCIATES
4949 Meadows Road
Suite 125
Lake Oswego, Oregon 97035
(503) 451-4500
FAX (530) 756-4991

ACE ENGINEERING LLC
professional structural engineering
commercial . residential . industrial
po box 231 . ashland . oregon 97520
541.552.1417 . ace-engineeringllc.com

CITY OF ALBANY
RIVERFRONT INTERCEPTOR SEWER
LIFT STATION AND FORCE MAIN

FOUNDATION PLAN

JOB NUMBER 519–14–18–18
DRAWING NUMBER S1
SHEET NUMBER 28 OF 59
REVISION

C:\Users\ACE\OneDrive\ACE\ENGINEERING\Work\2018-54 albany riverfront PS WYA\54 drawings\2018-54-S1.dwg 4/15/2019 12:25 PM ACE

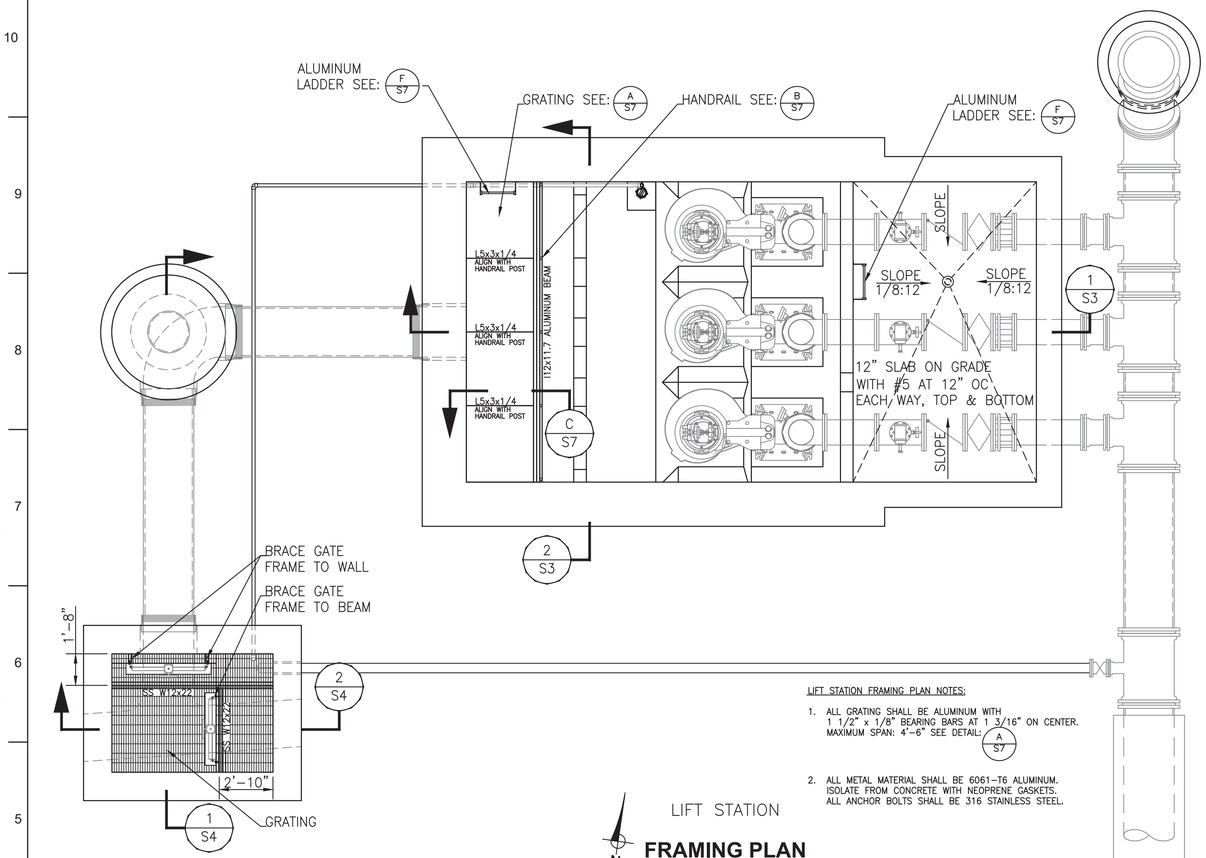

DIVERSION STRUCTURE FRAMING PLAN NOTES:

1. ALL GRATING SHALL BE STAINLESS STEEL WITH 1 1/2" x 1/8" BEARING BARS AT 1 3/16" ON CENTER. MAXIMUM SPAN: 4'-6" SEE DETAIL: A S7
2. ALL STEEL MATERIAL SHALL BE TYPE 316 STAINLESS STEEL.

LIFT STATION FRAMING PLAN NOTES:

1. ALL GRATING SHALL BE ALUMINUM WITH 1 1/2" x 1/8" BEARING BARS AT 1 3/16" ON CENTER. MAXIMUM SPAN: 4'-6" SEE DETAIL: A S7
2. ALL METAL MATERIAL SHALL BE 6061-T6 ALUMINUM. ISOLATE FROM CONCRETE WITH NEOPRENE GASKETS. ALL ANCHOR BOLTS SHALL BE 316 STAINLESS STEEL.

LIFT STATION

FRAMING PLAN

SCALE: 1/4"=1'-0"

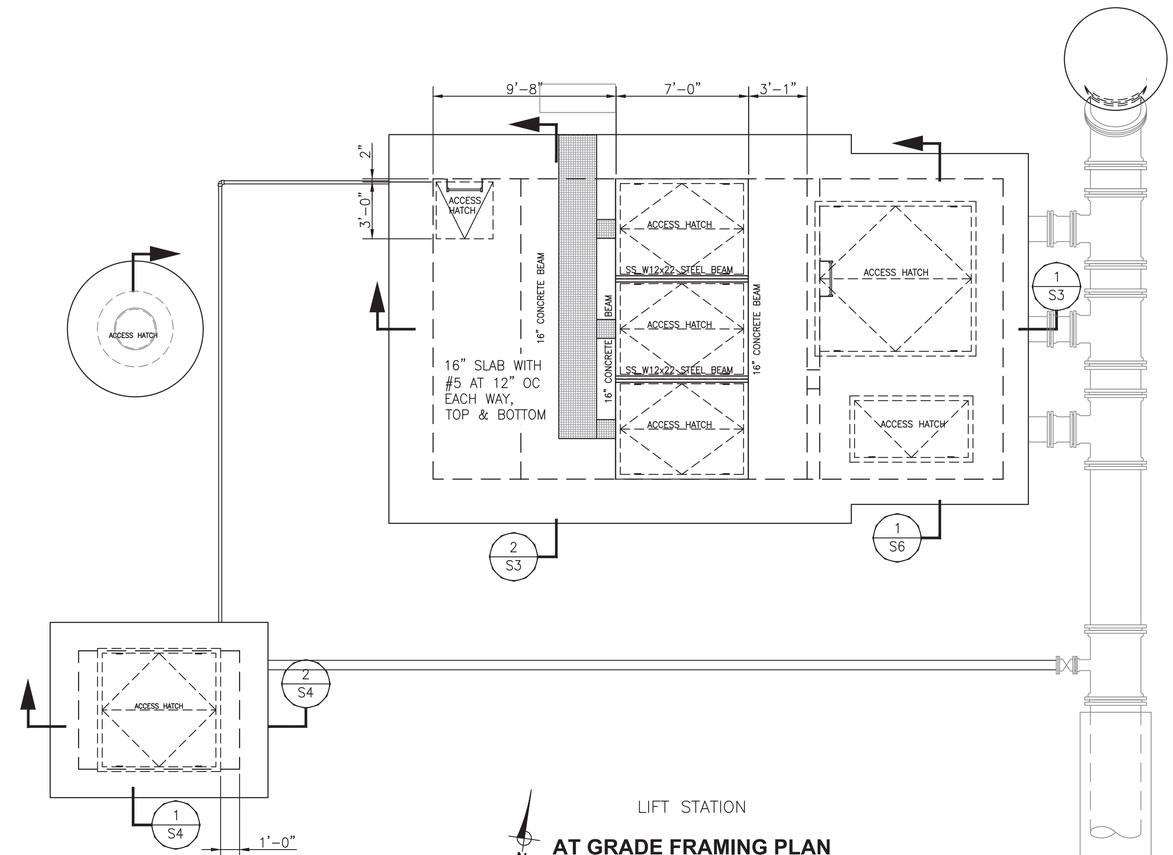

LIFT STATION

AT GRADE FRAMING PLAN

SCALE: 1/4"=1'-0"

REGISTERED PROFESSIONAL ENGINEER 64239PE DIGITALLY SIGNED OREGON MAY 9, 2000 ALLAN T GOFFE EXPIRES 6/30/2019

QC REVIEW: _____

DATE: _____

THIS LINE IS 1 INCH
AT FULL SCALE
IF NOT SCALE ACCORDINGLY

SCALE : AS SHOWN
DRAWN BY : ATG
DESIGNED BY : ATG
PROJ. MGR. : WJM

No.	ZONE	REVISIONS	BY	DATE

WEST YOST ASSOCIATES
4949 Meadows Road
Suite 125
Lake Oswego, Oregon 97035
(503) 451-4500
FAX (530) 756-4991

ACE ENGINEERING LLC
professional structural engineering
commercial . residential . industrial
po box 231 . ashland . oregon 97520
541.552.1417 . ace-engineeringllc.com

CITY OF ALBANY
RIVERFRONT INTERCEPTOR SEWER
LIFT STATION AND FORCE MAIN

FRAMING PLANS

JOB NUMBER 519-14-18-18
DRAWING NUMBER S2
SHEET NUMBER 29 OF 59
REVISION

C:\Users\ACE\OneDrive\ACE\ENGINEERING\Work\2018-54 albany riverfront PS WYA\54 drawings\2018-54-S2.dwg 4/15/2019 12:25 PM ACE

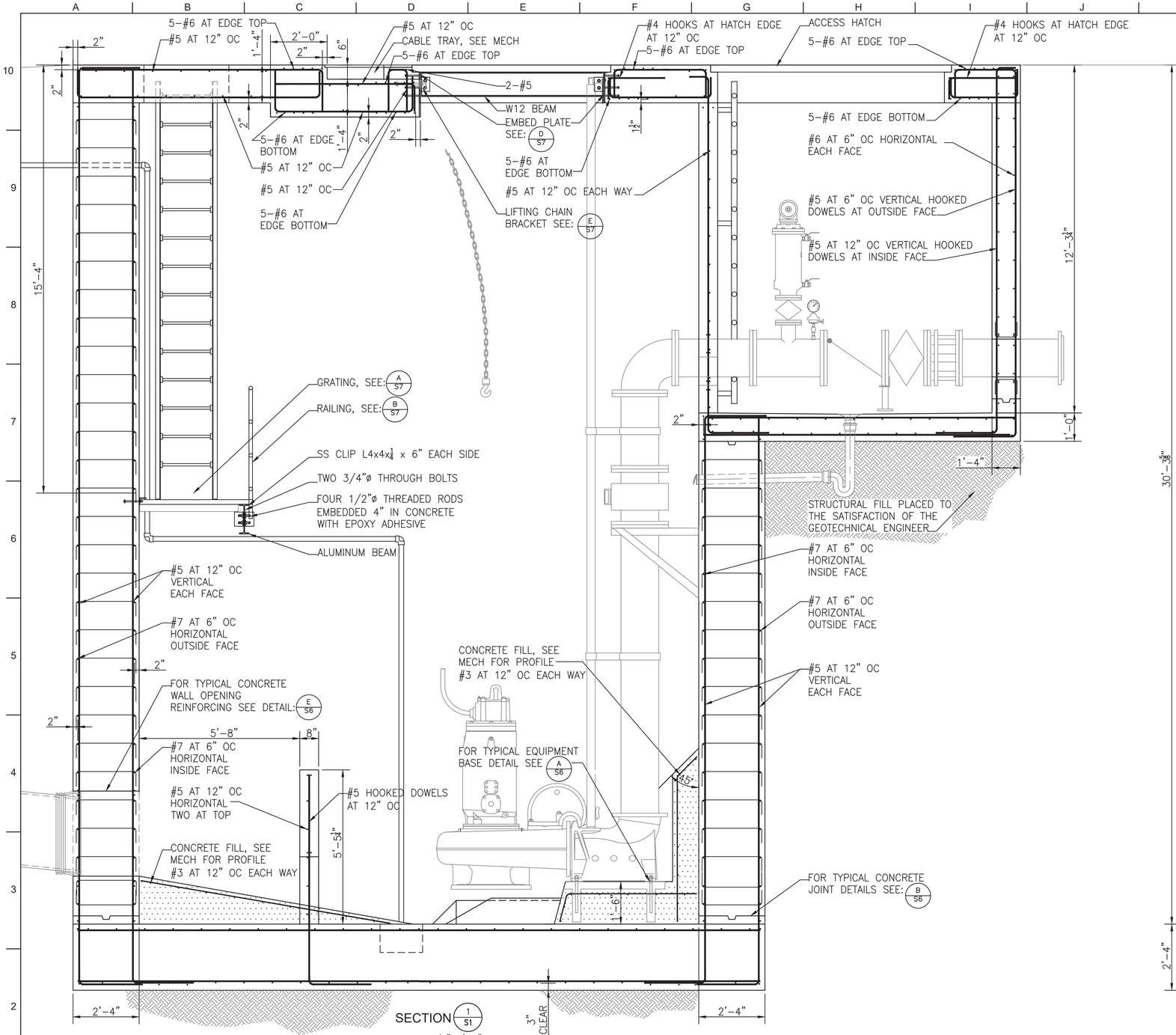

SECTION 1 S1

SCALE: 1/2"=1'-0"

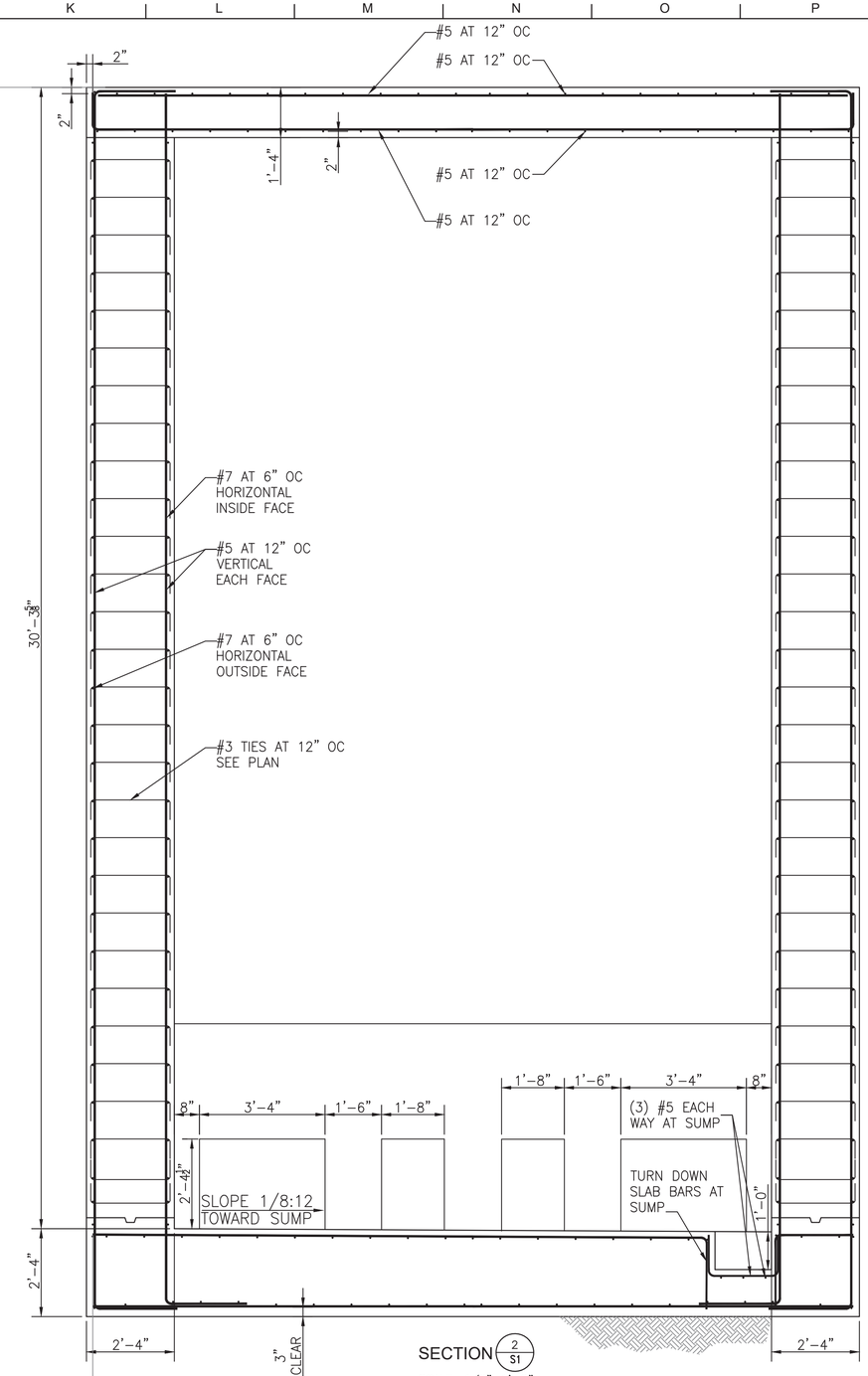

SECTION 2 S1

SCALE: 1/2"=1'-0"

REGISTERED PROFESSIONAL ENGINEER 64239PE DIGITALLY SIGNED OREGON MAY 9, 2000 ALLAN T GOFFE EXPIRES 6/30/2019

QC REVIEW: _____

DATE: _____

THIS LINE IS 1 INCH
AT FULL SCALE
IF NOT SCALE ACCORDINGLY

SCALE : AS SHOWN
DRAWN BY : ATG
DESIGNED BY : ATG
PROJ. MGR. : WJM

No.	ZONE	REVISIONS	BY	DATE

WEST YOST ASSOCIATES
4949 Meadows Road
Suite 125
Lake Oswego, Oregon 97035
(503) 451-4500
FAX (530) 756-4991

ACE ENGINEERING LLC
professional structural engineering
commercial . residential . industrial
po box 231 . ashland . oregon 97520
541.552.1417 . ace-engineeringllc.com

CITY OF ALBANY OREGON Inc. 1893

CITY OF ALBANY
RIVERFRONT INTERCEPTOR SEWER
LIFT STATION AND FORCE MAIN

WET WELL SECTIONS

JOB NUMBER 519-14-18-18
DRAWING NUMBER S3
SHEET NUMBER 30 OF 59
REVISION

C:\Users\ACE\OneDrive\ACE\ENGINEERING\Work\2018-54 albany riverfront PS WYA\54 drawings\2018-54-S3.dwg 4/15/2019 12:25 PM ACE

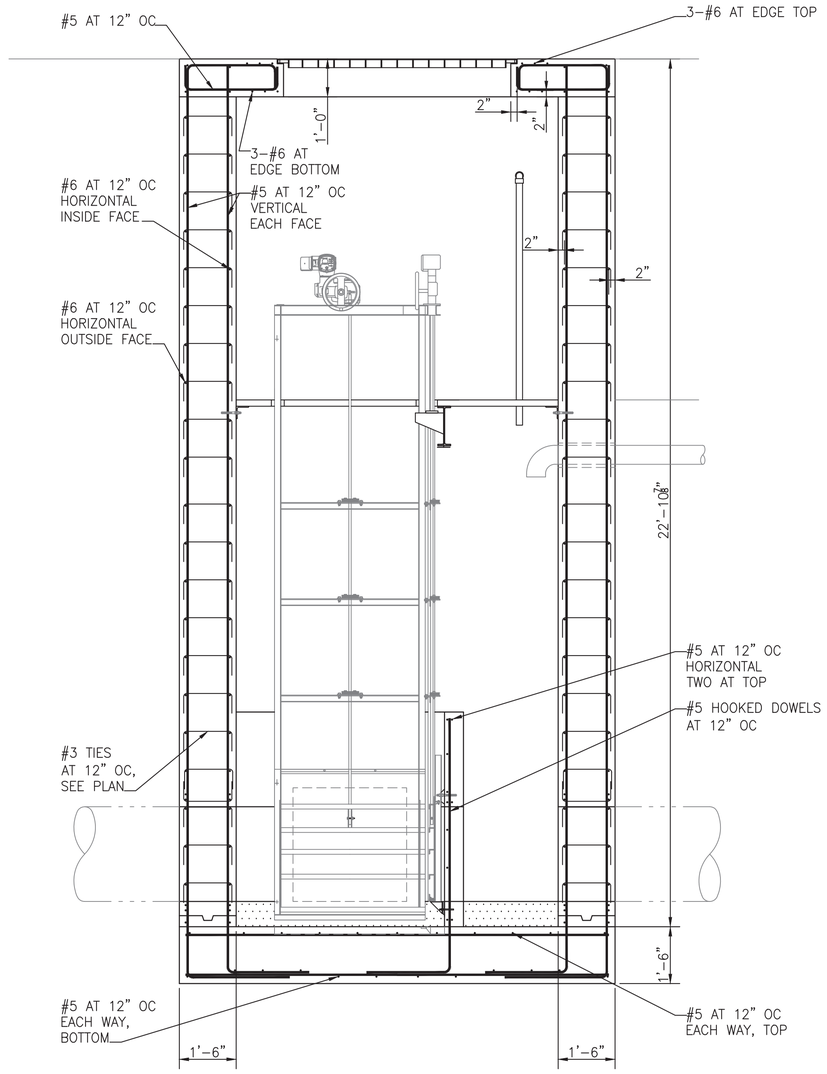

SECTION 2/S1

SCALE: 1/2"=1'-0"

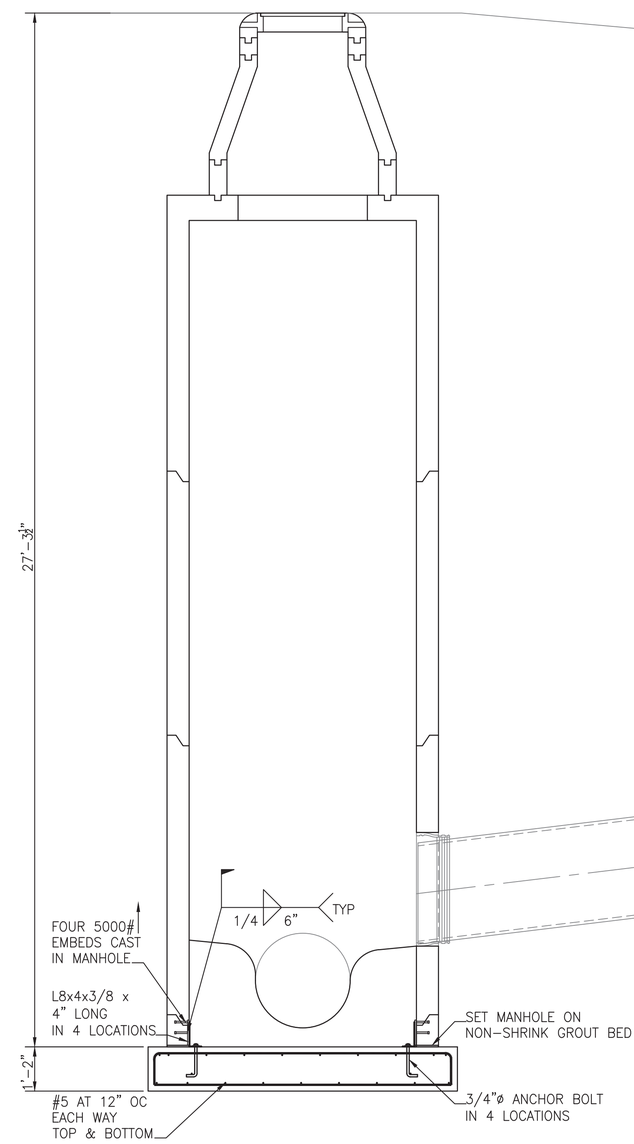

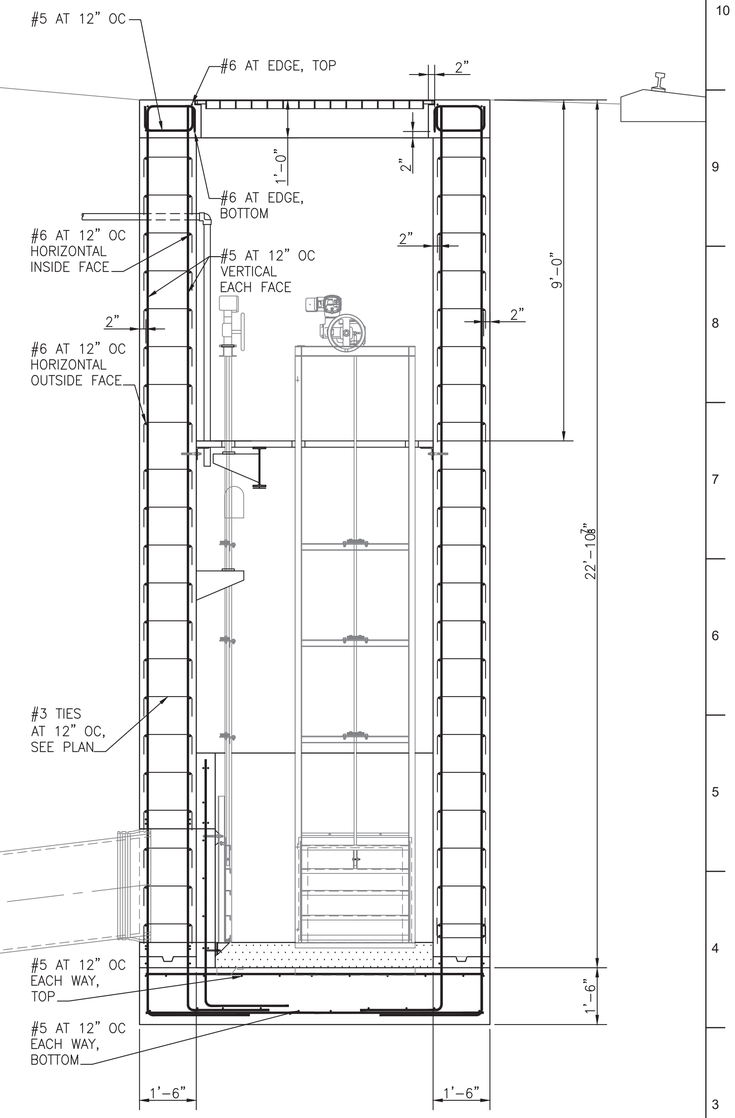

SECTION 1/S1

SCALE: 1/2"=1'-0"

REGISTERED PROFESSIONAL ENGINEER
64239PE
DIGITALLY SIGNED
OREGON
MAY 9, 2000
ALLAN T GOFFE
EXPIRES 6/30/2019

QC REVIEW: _____

DATE: _____

THIS LINE IS 1 INCH
AT FULL SCALE
IF NOT SCALE ACCORDINGLY

SCALE : AS SHOWN
DRAWN BY : ATG
DESIGNED BY : ATG
PROJ. MGR. : WJM

No.	ZONE	REVISIONS	BY	DATE

WEST YOST ASSOCIATES
4949 Meadows Road
Suite 125
Lake Oswego, Oregon 97035
(503) 451-4500
FAX (530) 756-4991

ACE ENGINEERING LLC
professional structural engineering
commercial . residential . industrial
po box 231 . ashland . oregon 97520
541.552.1417 . ace-engineeringllc.com

CITY OF ALBANY
OREGON
Inc. 1864

CITY OF ALBANY
RIVERFRONT INTERCEPTOR SEWER
LIFT STATION AND FORCE MAIN

DIVERSION STRUCTURE
SECTIONS

JOB NUMBER 519-14-18-18
DRAWING NUMBER S4
SHEET NUMBER 31 OF 59
REVISION

C:\Users\ACE\OneDrive\ACE\ENGINEERING\Work\2018-54 albany riverfront PS WYA\54 drawings\2018-54-S4.dwg 4/15/2019 12:25 PM ACE

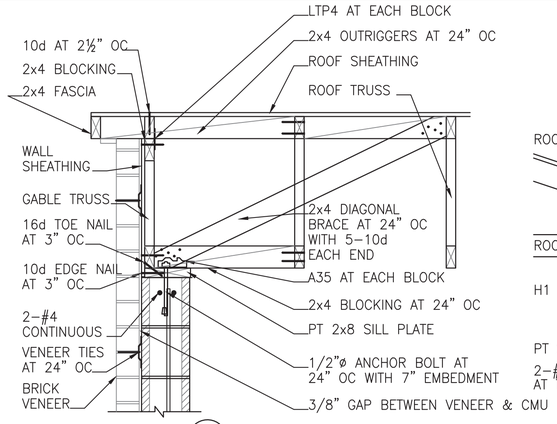

SECTION 4/S5
SCALE: 1"=1'-0"

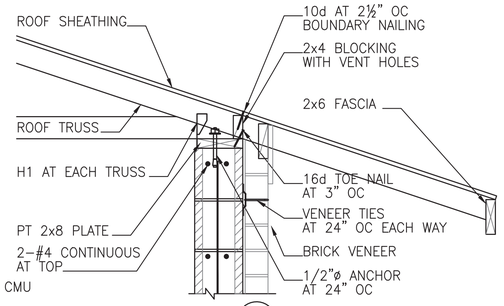

SECTION 3/S5
SCALE: 1"=1'-0"

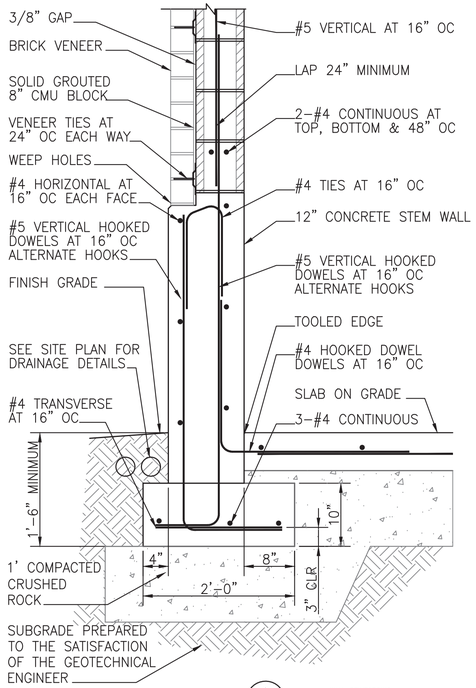

SECTION 2/S5
SCALE: 1"=1'-0"

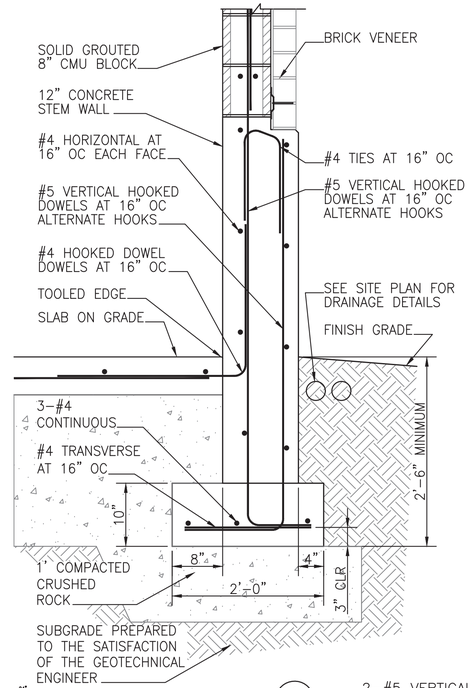

SECTION 1/S5
SCALE: 1"=1'-0"

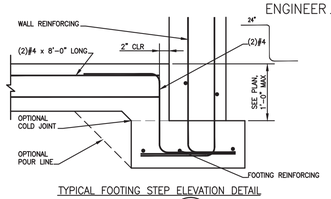

TYPICAL FOOTING STEP ELEVATION DETAIL

DETAIL E/S5
SCALE: NONE

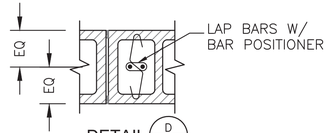

DETAIL D/S5
SCALE: NONE

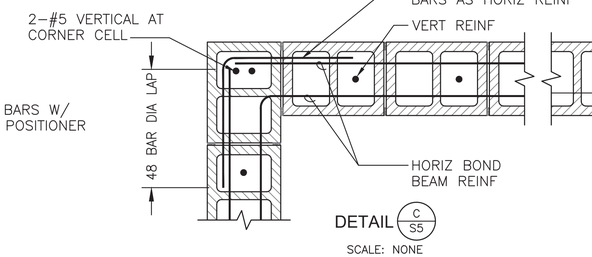

DETAIL C/S5
SCALE: NONE

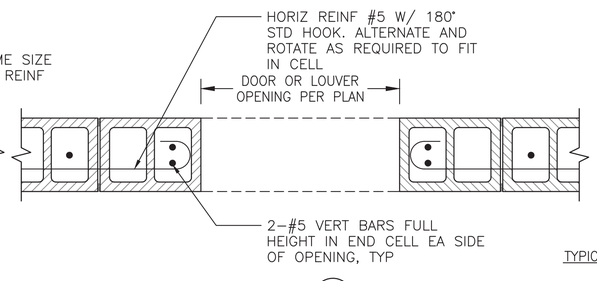

DETAIL B/S5
SCALE: NONE

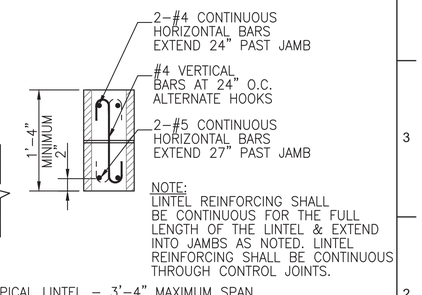

TYPICAL LINTEL – 3'-4" MAXIMUM SPAN

DETAIL A/S5
SCALE: NONE

GENERAL NOTES:

1. THE GENERAL CONTRACTOR IS RESPONSIBLE FOR VERIFICATION AND CORRELATION OF ALL DIMENSIONS, ELEVATIONS AND OPENINGS ON THE STRUCTURAL DRAWINGS WITH THE ARCHITECTURAL DRAWINGS. NOTIFY THE ARCHITECT OF ANY DISCREPANCIES PRIOR TO STARTING CONSTRUCTION.
2. PLANS AND CALCULATIONS FOR THE STRUCTURAL DESIGN WERE BASED UPON:
   – THE 2014 OREGON STRUCTURAL SPECIALTY CODE
3. DESIGN LOADS ARE AS FOLLOWS:
   VERTICAL:
   ROOF DEAD LOAD: 20 PSF
   ROOF SNOW LOAD: 25 PSF + DRIFT
   LATERAL:
   SEISMIC: IE=1.0, RISK CATEGORY II, SITE CLASS D, Ss=0.889, S1=0.468, SDS=0.684, SD1=0.456, BEARING WALL SYSTEMS, ORDINARY REINFORCED MASONRY SHEAR WALLS, R=2.0, Cs=0.084, EQUIVALENT LATERAL FORCE PROCEDURE.
   WIND: 120 MPH, EXPOSURE B, GCpi=+/–0.18.
   FOUNDATION: PREPARE SITE SOIL IN ACCORDANCE WITH THE RECOMMENDATIONS OF A GEOTECHNICAL ENGINEER. ALLOWABLE SOIL BEARING PRESSURE: 1500 PSF
4. THE STRUCTURAL DRAWINGS DO NOT REFLECT ALL OPENINGS THAT MAY BE REQUIRED FOR DUCTS, PIPES OR CONDUITS. IT IS THE RESPONSIBILITY OF THE CONTRACTOR TO COORDINATE OPENINGS WITH STRUCTURAL REQUIREMENTS.
5. THE STRUCTURAL DOCUMENTS REPRESENT THE FINAL STRUCTURE AND UNLESS SPECIFICALLY INDICATED THEY DO NOT SPECIFY THE METHOD OF CONSTRUCTION.

REINFORCED STRUCTURAL MASONRY NOTES:

1. ALL CELLS OF CONCRETE BLOCK CONSTRUCTION SHALL BE GROUTED SOLID.
2. ALL VERTICAL STEEL IN WALLS AND COLUMNS SHALL BE LAPPED WITH DOWELS OF THE SAME SIZE AND SPACING INTO THE FOOTING UNLESS NOTED OTHERWISE.
3. ALL BOLTS EMBEDDED IN CONCRETE BLOCK SHALL HAVE A MINIMUM OF 1" OF GROUT BETWEEN THE BOLT BODY AND THE CONCRETE BLOCK ON ALL SIDES. REMOVE WEBS OF BLOCK AS REQUIRED. BOLTS SHALL HAVE A MINIMUM OF 5" EMBEDMENT UNLESS NOTED OTHERWISE.
4. ALL REINFORCING IN CONCRETE BLOCK CONSTRUCTION SHALL HAVE 2" MINIMUM COVER INCLUDING THE CONCRETE BLOCK FACE SHELL.
5. TYPICAL VERTICAL WALL REINFORCING SHALL BE INSTALLED ON EACH SIDE OF ALL WALL OPENINGS AND SHALL EXTEND THE FULL HEIGHT OF THE WALL UNLESS NOTED OTHERWISE.
6. FOR LINTEL REINFORCING DETAILS AT DOOR, WINDOW AND OTHER WALL OPENINGS, SEE A/S5
7. TYPICAL WALL HORIZONTAL WALL REINFORCING SHALL BE INSTALLED ABOVE AND BELOW ALL OPENINGS. REINFORCEMENT SHALL EXTEND 30" PAST OPENINGS OR HOOKED AROUND CORNER OR HOOKED UP OR DOWN UNLESS NOTED OTHERWISE.
8. SPLICES OF REINFORCING SHALL BE CONTACT LAP SPLICES, SEE TYPICAL REINFORCING SPLICE REQUIREMENTS.
9. CONCRETE BLOCK WALLS SHALL HAVE VERTICAL CONTROL JOINTS AT A SPACING APPROXIMATELY EQUAL TO THE WALL HEIGHT,BUT NO GREATER THAN 20 FEET ON CENTER, SEE FOR VERTICAL CONTROL JOINT DETAIL.
10. CLEAN OUTS SHALL BE PROVIDED AT THE BOTTOM COURSE OF EVERY GROUT POUR AT EACH VERTICAL BAR.
11. THE STANDARD WIDTH OF BOTH VERTICAL AND HORIZONTAL MORTAR JOINTS SHALL BE 3/8".
12. CONCRETE BLOCK CONSTRUCTION SHALL BE RUNNING BOND,WITH STANDARD UNITS.
13. FOR REINFORCING DETAILS AT TYPICAL VERTICAL BARS SEE: D/S5
    AT LOUVER OR WINDOW OPENINGS SEE: B/S5
    AT CORNERS SEE: C/S5

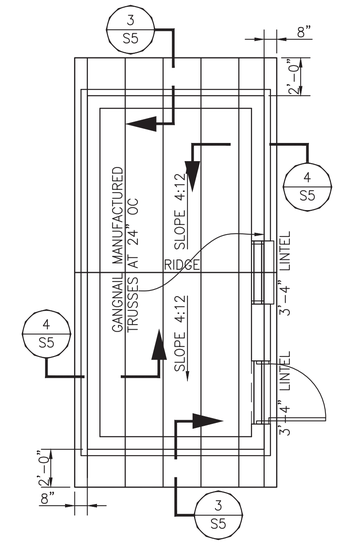

ELECTRICAL ROOM

ROOF FRAMING PLAN

SCALE: 1/4"=1'-0"

FRAMING PLAN NOTES:

1. SEE ARCHITECTURAL DRWAINGS FOR TOP OF WALL ELEVATIONS.
2. SEE ARCHITECTURAL DRAWINGS FOR LOCATION AND DIMENSION OF WALL OPENINGS.
3. PROVIDE FRAMING WITH PROFILES SHOWN. INCREASE PLYS OR GRADE AS REQUIRED FOR SNOW DRIFT, SKYLIGHT, & MECHANICAL LOADS.
4. ADJUST FRAMING LAYOUT AS NECESSARY FOR SKYLIGHT LOCATIONS. COORDINATE SKYLIGHT LOCATIONS WITH ARCHITECTURAL DRAWINGS.
5. FRAME NON-STRUCTURAL WALLS TO PERMIT DEFLECTION OF ROOF STRUCTURE, 1/2" GAP MINIMUM. USE SIMPSON HTC CLIP TO JOIST OR BLOCKING AT 48" OC, UNLESS NOTED OTHERWISE.
6. ALL NAILS ARE COMMON UNO. NAILING OF CONNECTIONS NOT NOTED SHALL BE FASTENED IN ACCORDANCE WITH ORSC TABLE 2304.9.1.
7. COMPLETELY NAIL ALL METAL CONNECTORS AND HANGERS TO DEVELOP THE MAXIMUM CAPACITY OF THE CONNECTOR. FOR ENGINEERED LUMBER DO NOT EXCEED MANUFACTURER'S MINIMUM NAIL SPACING. PREDRILL IF REQUIRED TO PREVENT SPLITTING.
8. BLOCK ALL PANEL EDGES OF ROOF DIAPHRAGM WITH FLAT 2X4. NAIL DIAPHRAGM BOUNDARIES WITH 10d AT 2½" OC, AND ALL EDGES WITH 10d AT 4" OC, AND 10d AT 12" OC IN THE FIELD OF SHEATHING PANELS.

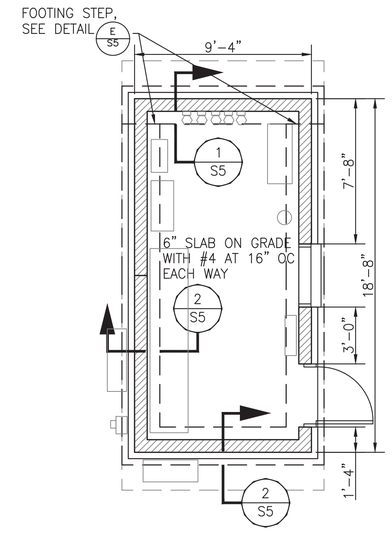

ELECTRICAL BUILDING

FOUNDATION PLAN

SCALE: 1/4"=1'-0"

FOUNDATION PLAN NOTES:

1. EXCAVATE AT LEAST 3 FEET OF EXISTING SITE SOIL MATERIAL INTO NATIVE IN SITU SOIL MATERIAL. PLACE COMPACTED CRUSHED ROCK BACKFILL TO FOOTING & SLAB GRADE.
2. ALL FOOTINGS SHALL BEAR ON SOIL PREPARED TO THE SATISFACTION OF THE PROJECT GEOTECHNICAL ENGINEER. CONTACT GEOTECHNICAL ENGINEER PRIOR TO PLACING ANY MATERIAL.
3. EXCAVATIONS SHALL COMPLY WITH OSHA REQUIREMENTS AND ANY OTHER GOVERNING AGENCY. AT NO TIME SHALL THE CONTRACTOR ALLOW UNSAFE CONDITIONS DURING CONSTRUCTION.
4. SEE ARCHITECTURAL DRAWINGS FOR LOCATION AND DIMENSION OF WALL OPENINGS.
5. SEE ARCHITECTURAL AND LANDSCAPE DRAWINGS FOR EXTERIOR SLAB AND NON-STRUCTRUAL WALLS NOT PART OF THE STRUCTURE.
6. DO NOT WET SET ANCHOR BOLTS, REINFORCING OR OTHER ITEMS TO BE EMBEDDED IN CONCRETE OR STRUCTURAL MASONRY.
7. FOR PIPES AND CONDUITS PASSING THROUGH FOOTINGS SEE: C/S6

REGISTERED PROFESSIONAL ENGINEER 64239PE DIGITALLY SIGNED OREGON MAY 9, 2000 ALAN T GOFFE EXPIRES 6/30/2019

QC REVIEW: _____

DATE: _____

THIS LINE IS 1 INCH
AT FULL SCALE
IF NOT SCALE ACCORDINGLY

SCALE : AS SHOWN
DRAWN BY : ATG
DESIGNED BY : ATG
PROJ. MGR. : WJM

No.	ZONE	REVISIONS	BY	DATE

WEST YOST ASSOCIATES
4949 Meadows Road
Suite 125
Lake Oswego, Oregon 97035
(503) 451-4500
FAX (530) 756-4991

ACE ENGINEERING LLC
professional structural engineering
commercial . residential . industrial
po box 231 . ashland . oregon 97520
541.552.1417 . ace-engineeringllc.com

CITY OF ALBANY · OREGON · Est. 1864

CITY OF ALBANY
RIVERFRONT INTERCEPTOR SEWER
LIFT STATION AND FORCE MAIN

ELECTRICAL BUILDING
PLANS AND DETAILS

JOB NUMBER 519-14-18-18
DRAWING NUMBER S5
SHEET NUMBER 32 OF 59
REVISION

C:\Users\ACE\OneDrive\ACE\ENGINEERING\Work\2018-54 albany riverfront PS WYA\54 drawings\2018-54-S5.dwg 4/15/2019 12:24 PM ACE

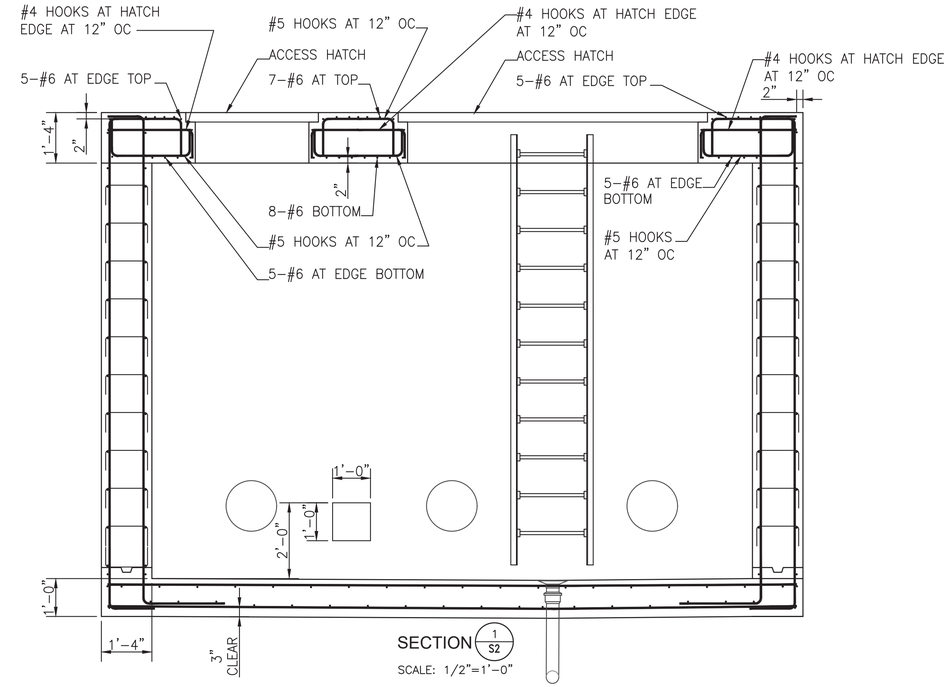

SECTION 1/S2

SCALE: 1/2"=1'-0"

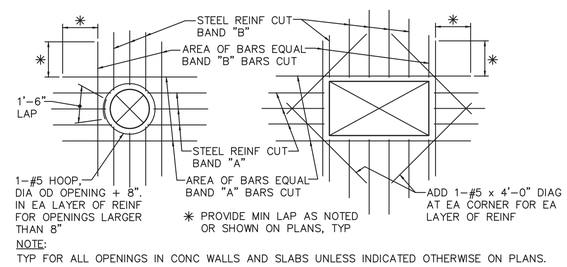

NOTE:
TYP FOR ALL OPENINGS IN CONC WALLS AND SLABS UNLESS INDICATED OTHERWISE ON PLANS.

TYPICAL CONCRETE WALL OPENING REINFORCING DETAIL

DETAIL E/S3

SCALE: NONE

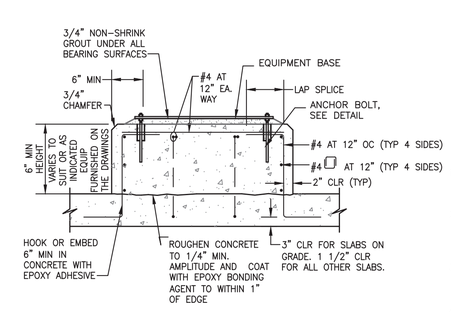

1. THE MINIMUM PAD SIZE SHALL BE AS INDICATED OR AS SHOWN ON THE DRAWINGS OR AS DETERMINED BY THE EQUIPMENT MANUFACTURER.

2. THE SIZE, NUMBER, TYPE, LOCATION AND THREAD PROJECTION OF THE ANCHOR BOLTS SHALL BE DETERMINED BY THE EQUIPMENT MANUFACTURER. HOLD CONCRETE ANCHOR BOLTS IN POSITION WITH A TEMPLATE WHILE PAD IS BEING PLACED.

3. USE ANCHOR BOLT SLEEVES TO PROVIDE THE ANCHOR BOLT A MINIMUM MOVEMENT OF 1/2" IN ALL DIRECTIONS. SLEEVES SHALL BE FILLED WITH NON-SHRINK GROUT.

4. ANCHOR BOLT SLEEVES SHALL HAVE A MINIMUM INTERNAL DIAMETER 1" GREATER AND A MAXIMUM INTERNAL DIAMETER 3" GREATER THAN ANCHOR BOLT DIAMETER.

5. EQUIPMENT BASES SHALL BE INSTALLED LEVEL U.O.N.

6. PROVIDE WEDGES OR SHIMS TO SUPPORT THE BASE WHILE THE NON-SHRINK GROUT IS PLACED. TEMPORARY LEVELING NUTS SHALL BE BACKED OFF. THE WEDGES OR SHIMS THAT REMAIN IN PLACE SHALL NOT BE EXPOSED TO VIEW.

7. WHERE CONCRETE SLAB OR BEAM THICKNESS WILL NOT ACCOMMODATE THE ANCHOR BOLT, PROVIDE EXTRA THICKNESS OF SLAB OR BEAM.

8. CONTRACTOR TO PROVIDE STRUCTURAL CALCS FOR EQUIPMENT ANCHORAGE STAMPED BY A PROFESSIONAL ENGINEER REGISTERED IN THE STATE OF OREGON.

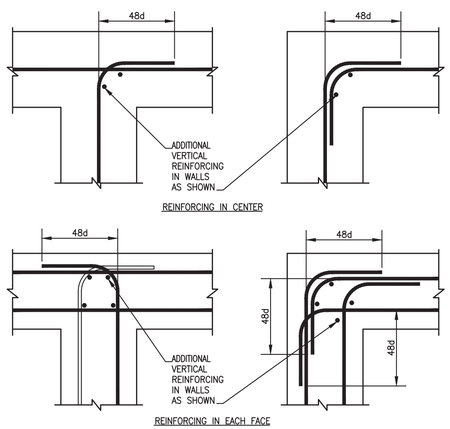

TYPICAL CONCRETE FOOTING & WALL INTERSECTION

DETAIL D/S3

SCALE: NONE

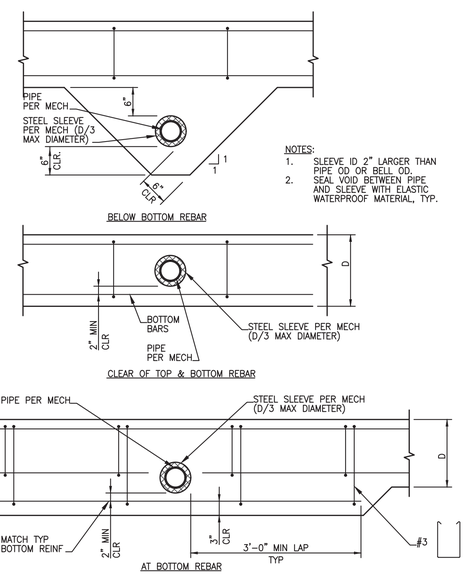

NOTES:
1. SLEEVE ID 2" LARGER THAN PIPE OD OR BELL OD. SEAL VOID BETWEEN PIPE AND SLEEVE WITH ELASTIC WATERPROOF MATERIAL, TYP.

TYPICAL PIPES PERPENDICULAR TO FOOTING

DETAIL C/S5

SCALE: NONE

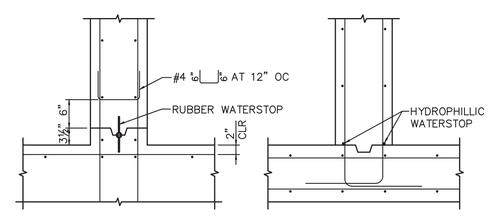

HORIZONTAL JOINT

VERTICAL JOINT

DETAIL B/S3

SCALE: NONE

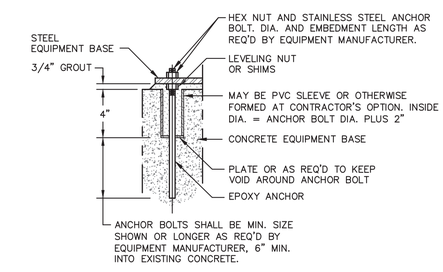

TYPICAL EQUIPMENT BASE

DETAIL A/S3

SCALE: NONE

REGISTERED PROFESSIONAL ENGINEER 64239PE DIGITALLY SIGNED OREGON MAY 9, 2000 ALLAN T GOFFE EXPIRES 6/30/2019

QC REVIEW: _____

DATE: _____

THIS LINE IS 1 INCH
AT FULL SCALE
IF NOT SCALE ACCORDINGLY

SCALE : AS SHOWN
DRAWN BY : ATG
DESIGNED BY : ATG
PROJ. MGR. : WJM

No.	ZONE	REVISIONS	BY	DATE

WEST YOST ASSOCIATES
4949 Meadows Road
Suite 125
Lake Oswego, Oregon 97035
(503) 451-4500
FAX (530) 756-4991

ACE ENGINEERING LLC
professional structural engineering
commercial . residential . industrial
po box 231 . ashland . oregon 97520
541.552.1417 . ace-engineeringllc.com

CITY OF ALBANY
OREGON
Inc. 1864

CITY OF ALBANY
RIVERFRONT INTERCEPTOR SEWER LIFT STATION AND FORCE MAIN

TYPICAL DETAILS

JOB NUMBER 519-14-18-18
DRAWING NUMBER S6
SHEET NUMBER 33 OF 59
REVISION

C:\Users\ACE\OneDrive\ACE\ENGINEERING\Work\2018-54 albany riverfront PS WYA\54 drawings\2018-54-S6.dwg 4/15/2019 12:24 PM ACE

NOTES:
1. FIELD VERIFY HEIGHT AND MOUNTING LOCATIONS PRIOR TO FABRICATION.
2. SEE PLANS FOR MATERIAL TYPE.
3. ALL FASTENERS SHALL BE STAINLESS STEEL TYPE 316.

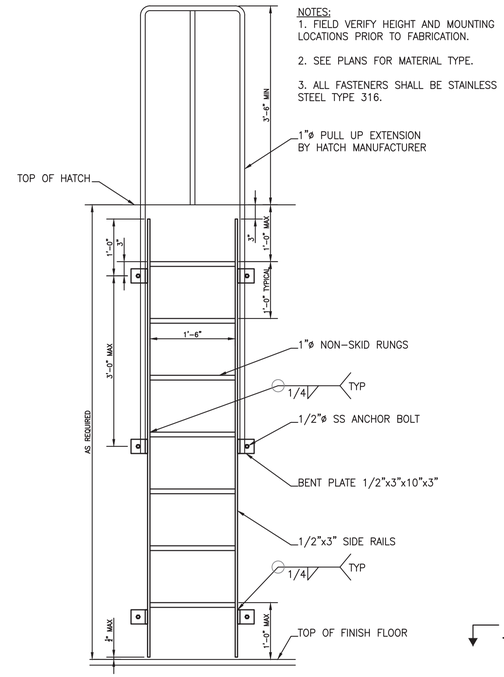

ACCESS LADDER

DETAIL F/S2
SCALE: NONE

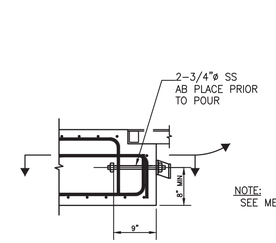

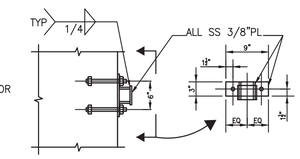

LIFTING CHAIN BRACKET

NOTE:
SEE MECHANICAL DRAWINGS FOR BRACKET LOCATIONS.

DETAIL E/S3
SCALE: NONE

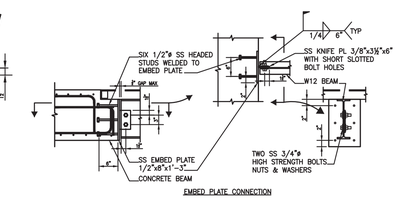

EMBED PLATE CONNECTION

DETAIL D/S3
SCALE: NONE

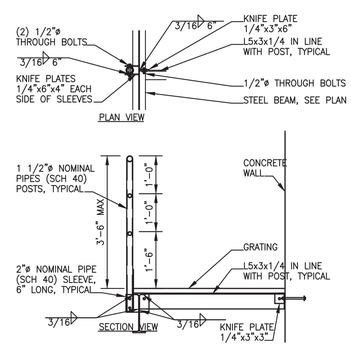

TYPICAL RAILING DETAIL

DETAIL C/S2
SCALE: NONE

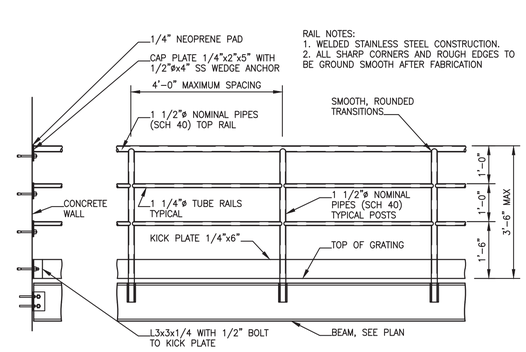

RAIL NOTES:
1. WELDED STAINLESS STEEL CONSTRUCTION.
2. ALL SHARP CORNERS AND ROUGH EDGES TO BE GROUND SMOOTH AFTER FABRICATION

TYPICAL RAILING ELEVATION DETAIL

DETAIL B/S2
SCALE: NONE

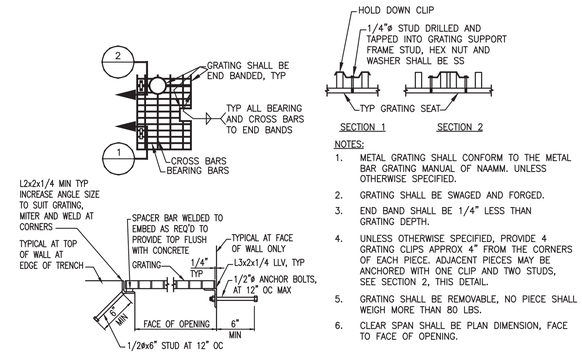

NOTES:
1. METAL GRATING SHALL CONFORM TO THE METAL BAR GRATING MANUAL OF NAAMM. UNLESS OTHERWISE SPECIFIED.
2. GRATING SHALL BE SWAGED AND FORGED.
3. END BAND SHALL BE 1/4" LESS THAN GRATING DEPTH.
4. UNLESS OTHERWISE SPECIFIED, PROVIDE 4 GRATING CLIPS APPROX 4" FROM THE CORNERS OF EACH PIECE. ADJACENT PIECES MAY BE ANCHORED WITH ONE CLIP AND TWO STUDS, SEE SECTION 2, THIS DETAIL.
5. GRATING SHALL BE REMOVABLE, NO PIECE SHALL WEIGH MORE THAN 80 LBS.
6. CLEAR SPAN SHALL BE PLAN DIMENSION, FACE TO FACE OF OPENING.

TYPICAL GRATING DETAIL

DETAIL A/S2
SCALE: NONE

REGISTERED PROFESSIONAL ENGINEER 64239PE DIGITALLY SIGNED OREGON MAY 9, 2000 ALLAN T GOFFE
EXPIRES 6/30/2019

QC REVIEW: _____
DATE: _____

THIS LINE IS 1 INCH
AT FULL SCALE
IF NOT SCALE ACCORDINGLY

SCALE : AS SHOWN
DRAWN BY : ATG
DESIGNED BY : ATG
PROJ. MGR. : WJM

No.	ZONE	REVISIONS	BY	DATE

WEST YOST ASSOCIATES
4949 Meadows Road
Suite 125
Lake Oswego, Oregon 97035
(503) 451-4500
FAX (530) 756-4991

ACE ENGINEERING LLC
professional structural engineering
commercial . residential . industrial
po box 231 . ashland . oregon 97520
541.552.1417 . ace-engineeringllc.com

CITY OF ALBANY
OREGON
Est. 1850

CITY OF ALBANY
RIVERFRONT INTERCEPTOR SEWER
LIFT STATION AND FORCE MAIN

TYPICAL METAL DETAILS

JOB NUMBER 519-14-18-18
DRAWING NUMBER S7
SHEET NUMBER 34 OF 59
REVISION

C:\Users\ACE\OneDrive\ACE\ENGINEERING\Work\2018-54 albany riverfront PS WYA\54 drawings\2018-54-S7.dwg 4/15/2019 12:24 PM ACE