CODE SYNOPSIS

1. CODES USED IN ANALYSIS: 2014 OREGON STRUCTURAL SPECIALITY CODE (OSSC)
2. ELECTRICAL BUILDING OCCUPANCY: F–1
3. BUILDING CONSTRUCTION TYPE: TYPE VB
4. ALLOWABLE AREA (OSSC TABLE 503):
   F–1 = 8,500 SF WITHOUT ANY SIDE YARDS
   ACTUAL AREA: 200 SF
5. ALLOWABLE HEIGHT: 1 STORY & 40–FEET ABOVE GRADE
6. OCCUPANT LOAD (CALCULATED OSSC TABLE 1004.1.2): 1 OCCUPANTS
7. ACTUAL OCCUPANT LOAD: NORMALLY UNOCCUPIED, 1 TO 2 OCCUPANTS WHEN SERVICING EQUIPMENT.
8. DISTANCE TO OTHER STRUCTURES: THE ASSUMED PROPERTY LINE IS A MINIMUM 20 FEET AWAY FROM THE PROPERTY LINE & OTHER STRUCTURES
9. ACCESS FOR PEOPLE WITH DISABILITIES: NOT REQUIRED IN THE BUILDING PER OSSC
10. FIRE SPRINKLERS: NOT REQUIRED BY OSSC OCCUPANCY OR AREA, OR LOCAL ORDINANCE.

EXITING ANALYSIS

ONE EXIT WITH PANIC EGRESS HARDWARE REQUIRED DUE TO EQUIPMENT EXCEEDING 800 AMPS.

CONSTRUCTION NOTES

1. DIMENSIONS ARE TO FACE OF CMU UNLESS NOTED OTHERWISE.
2. WALLS: EXTERIOR 8" CMU AND CLAY BRICK VENEER
3. ROOF STRUCTURE: WOOD FRAMING
4. ROOF: METAL, CLASS C ASSEMBLIES PER OSSC TABLE 1505.1
5. OPENINGS: NON–RATED
6. FIRE ALARM: NONE

FINISH NOTES

INTERIOR

1. PAINT EXPOSED WOOD FRAMING AND PLYWOOD SHEATHING CEILING WITH SEMI–GLOSS ACRYLIC ENAMEL.
2. CONCRETE FLOOR SEALER: SEAL FLOORS WITH CLEAR SEALER IN ACCORDANCE WITH SPECIFICATIONS.

EXTERIOR

1. FINISH BRICK VENEER WITH ANTI–GRAFFITI COATING.
2. EXPOSED WOOD FRAMING AND SHEATHING: PAINT WITH EXTERIOR FLAT ACRYLIC COATING.
3. EXPOSED METAL FLASHING & TRIM EXCEPT FOR PREFINISHED MATERIALS: SEMI–GLOSS ACRYLIC ENAMEL

HM DOORS & FRAMES AND ALUMINUM COMPOSITE PANEL: SEMI–GLOSS ACRYLIC ENAMEL

FIRE EXTINGUISHER NOTES

1. FIRE EXTINGUISHERS: PROVIDE WALL MOUNTED FIRE EXTINGUISHER AS LOCATED BY THE CITY. THE FIRE EXTINGUISHERS SHALL MEET THE FOLLOWING REQUIREMENTS:
2.
   2.1. RATING: 4A–80B:C
   2.2. TYPE AND SIZE: MULTI–PURPOSE DRY CHEMICAL
   2.3. CONTAINER & COLOR: STEEL WITH CORROSION RESISTANT RED COATING.
   2.4. ACCEPTABLE PRODUCTS: J.L. LARSON, MODEL MP10 & WALL BRACKET 817; OR EQUAL.
   2.5. MOUNTING: 3'–6" FEET TO 5'–0" ABOVE FLOOR.
   2.6. SIGNAGE:
      2.6.1. SIZE & TYPE: 4" BY 18" HIGH, VINYL, WALL MOUNTED, ADHESIVE APPLIED.
      2.6.2. GRAPHICS: LABEL READS "FIRE EXTINGUISHER" WITH ARROW POINTING DOWN, LUMINOUS ON RED BACKGROUND & RED LETTERS. SIGNAGE AS SUPPLIED BY SETON OR EQUAL,

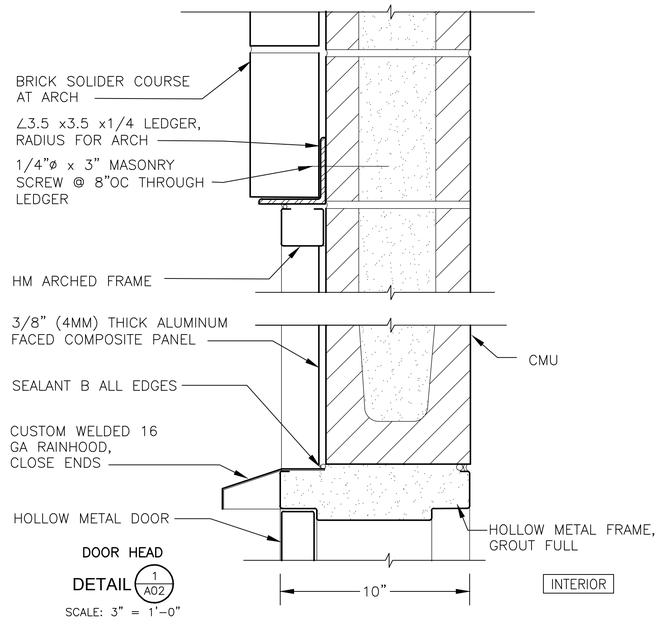

DOOR HEAD
DETAIL 1/A02
SCALE: 3" = 1'–0"

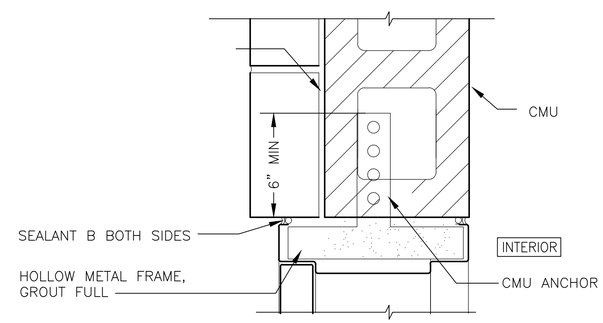

DOOR JAMB
DETAIL 2/A02
SCALE: 3" = 1'–0"

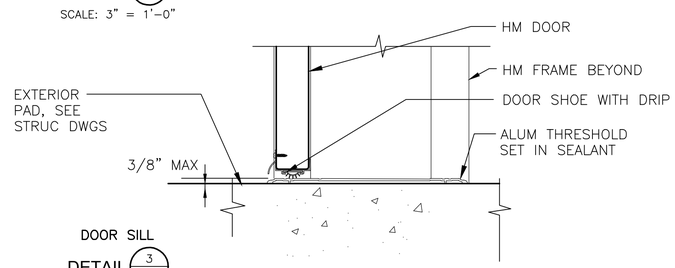

DOOR SILL
DETAIL 3/A02
SCALE: 3" = 1'–0"

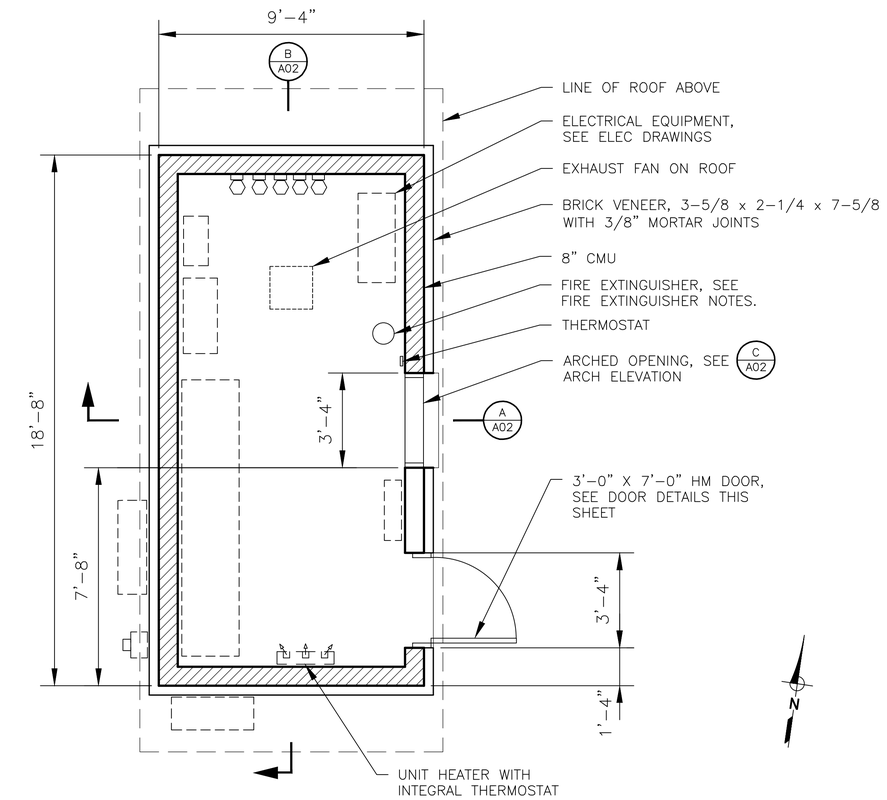

ELECTRICAL BUILDING
PLAN
SCALE: 3/8" = 1'–0"

REGISTERED ARCHITECT 4422 DANIEL J. WRIGHT Digitally Signed SAN FRANCISCO, CA STATE OF OREGON
EXPIRES 12/31/2020

QC REVIEW: _____
DATE: _____

THIS LINE IS 1 INCH
AT FULL SCALE
IF NOT SCALE ACCORDINGLY

SCALE : AS SHOWN
DRAWN BY : DJW
DESIGNED BY : NEW/DAM
PROJ. MGR. : WJM

No.	ZONE	REVISIONS	BY	DATE

WEST YOST ASSOCIATES
4949 Meadows Road
Suite 125
Lake Oswego, Oregon 97035
(503) 451-4500
FAX (530) 756-4991

CITY OF ALBANY OREGON Inc. 1864

CITY OF ALBANY
RIVERFRONT INTERCEPTOR SEWER LIFT STATION AND FORCE MAIN

ELECTRICAL BUILDING PLAN, SCHEDULES AND NOTES

JOB NUMBER 519–14–18–18
DRAWING NUMBER **A01**
SHEET NUMBER 25 OF 59
REVISION

P:\Clients\519 City of Albany\14–18–18 Rvrfrnt Intrcptr Wet Wthr LS and FM\CAD\Production\51914–1818_A01–A03.DWG 4/16/2019 2:18 PM rmurnane

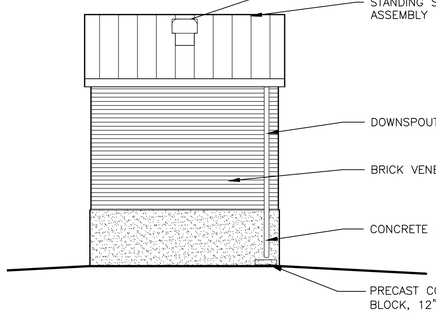

ELECTRICAL BUILIDNG

NORTH ELEVATION

SCALE: 1/4" = 1'-0"

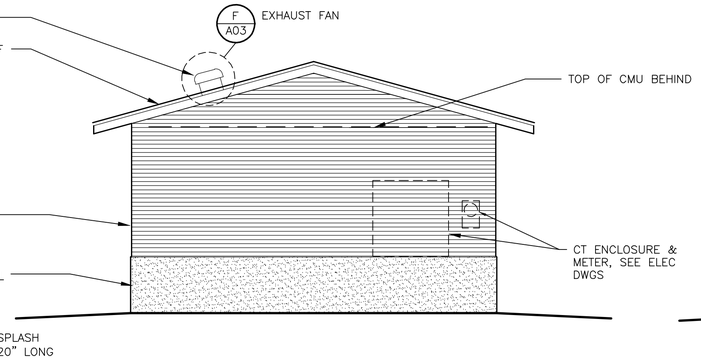

ELECTRICAL BUILIDNG

WEST ELEVATION

SCALE: 1/4" = 1'-0"

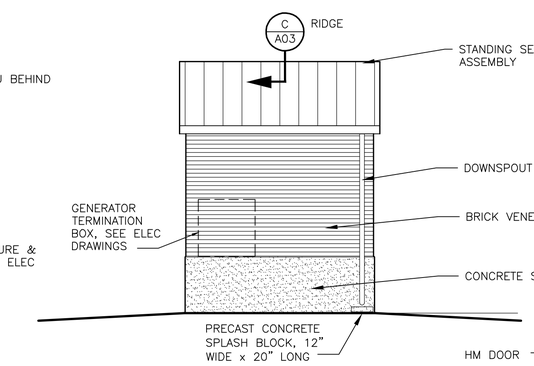

ELECTRICAL BUILIDNG

SOUTH ELEVATION

SCALE: 1/4" = 1'-0"

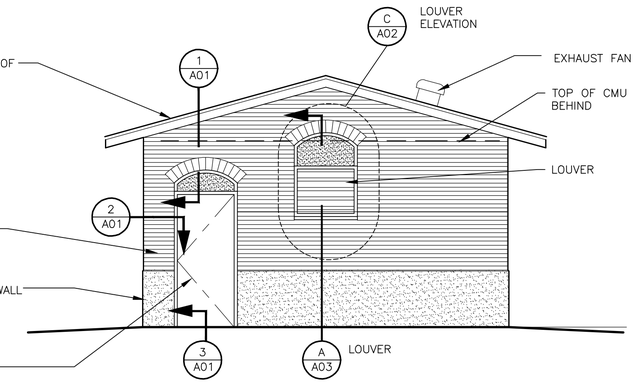

ELECTRICAL BUILIDNG

EAST ELEVATION

SCALE: 1/4" = 1'-0"

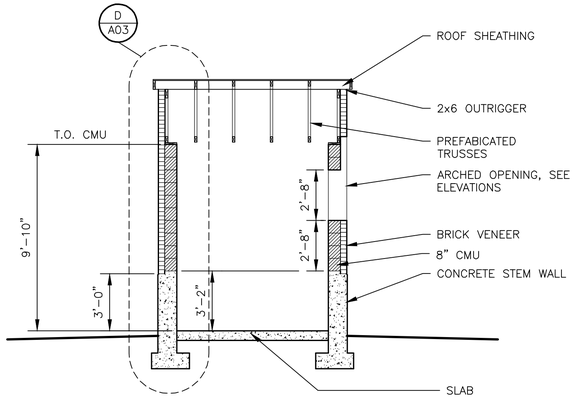

ELECTRICAL BUILIDNG

CROSS SECTION A (A / A01)

SCALE: 1/4" = 1'-0"

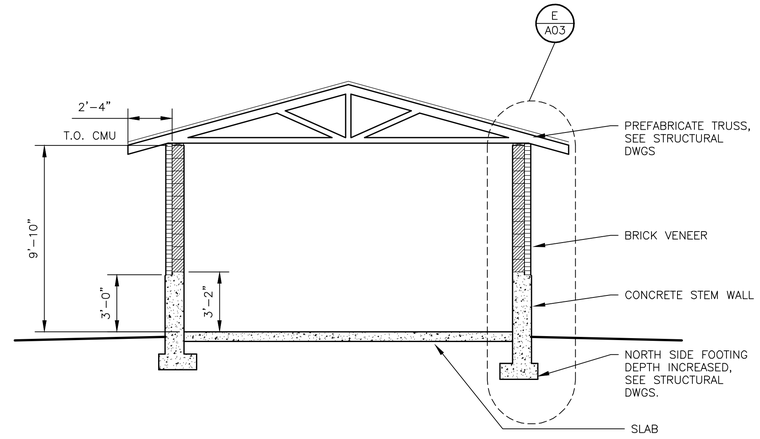

ELECTRICAL BUILIDNG

LONGITUDINAL SECTION B (B / A01)

SCALE: 1/4" = 1'-0"

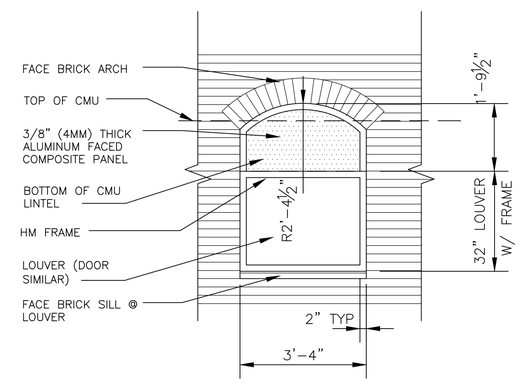

ELECTRICAL BUILIDNG

TYPICAL ARCH ELEVATION (C / A02)

SCALE: 1/2" = 1'-0"

REGISTERED ARCHITECT 4422 DANIEL J. WRIGHT Digitally Signed SAN FRANCISCO, CA STATE OF OREGON EXPIRES 12/31/2020

QC REVIEW: _____

DATE: _____

THIS LINE IS 1 INCH

AT FULL SCALE IF NOT SCALE ACCORDINGLY

SCALE : AS SHOWN
DRAWN BY : DJW
DESIGNED BY : NEW/DAM
PROJ. MGR. : WJM

No.	ZONE	REVISIONS	BY	DATE

WEST YOST ASSOCIATES
4949 Meadows Road
Suite 125
Lake Oswego, Oregon 97035
(503) 451-4500
FAX (530) 756-4991

CITY OF ALBANY OREGON Est. 1850

CITY OF ALBANY
RIVERFRONT INTERCEPTOR SEWER
LIFT STATION AND FORCE MAIN

ELECTRICAL BUILDING
ELEVATIONS & SECTIONS

JOB NUMBER 519-14-18-18
DRAWING NUMBER **A02**
SHEET NUMBER 26 OF 59
REVISION

P:\Clients\519 City of Albany\14-18-18 Rvrfrnt Intrcptr Wet Wthr LS and FM\CAD\Production\51914-1818_A01-A03.DWG 4/16/2019 2:18 PM jham

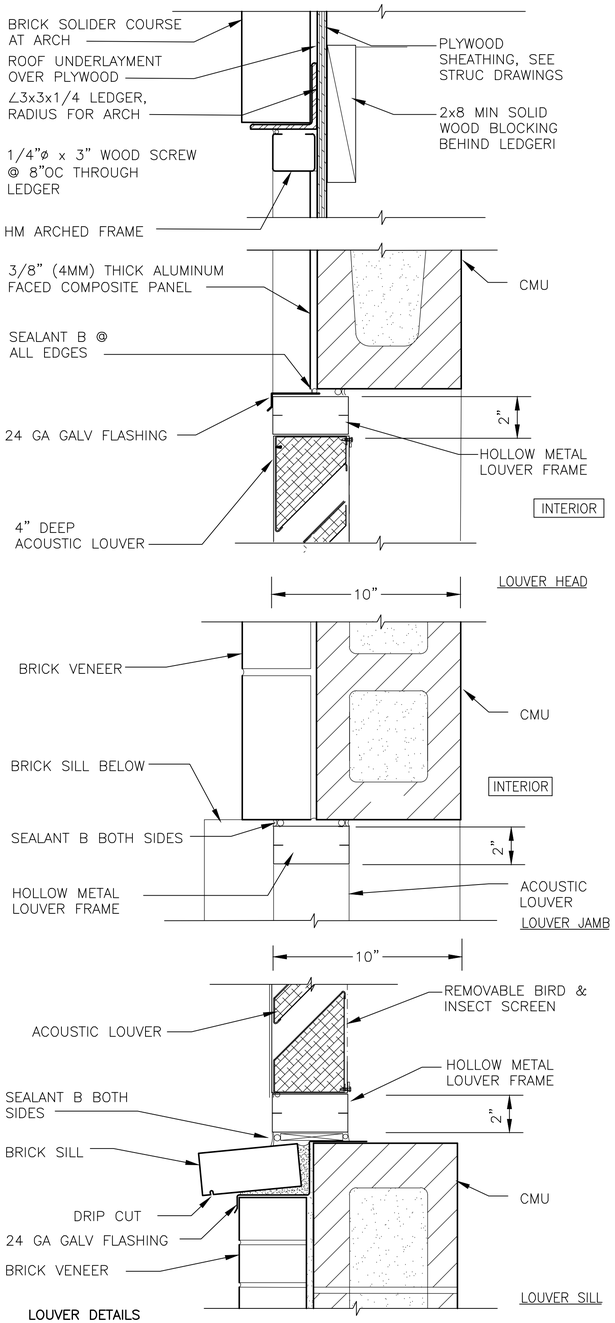

LOUVER DETAILS

DETAIL A/A02

SCALE: 1" = 1'-0"

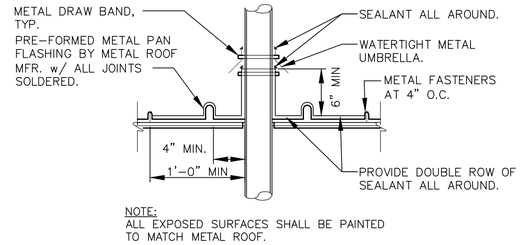

NOTE:
ALL EXPOSED SURFACES SHALL BE PAINTED TO MATCH METAL ROOF.

TYPICAL ROOF PENETRATION

DETAIL B/TYP

SCALE: 1" = 1'-0"

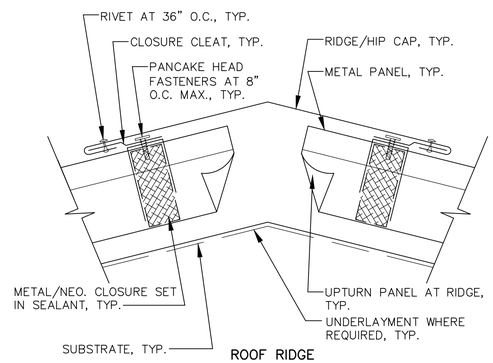

ROOF RIDGE

DETAIL C/A02

SCALE: 1" = 1'-0"

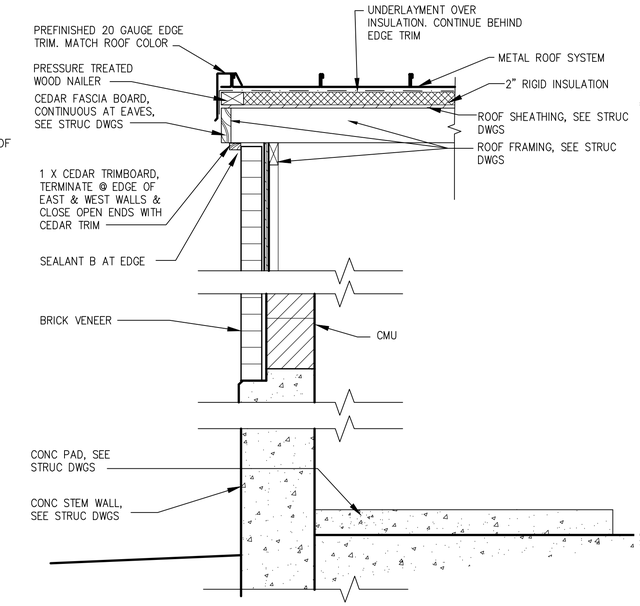

EXTERIOR WALL

SECTION D/A02

SCALE: 1"=1'-0"

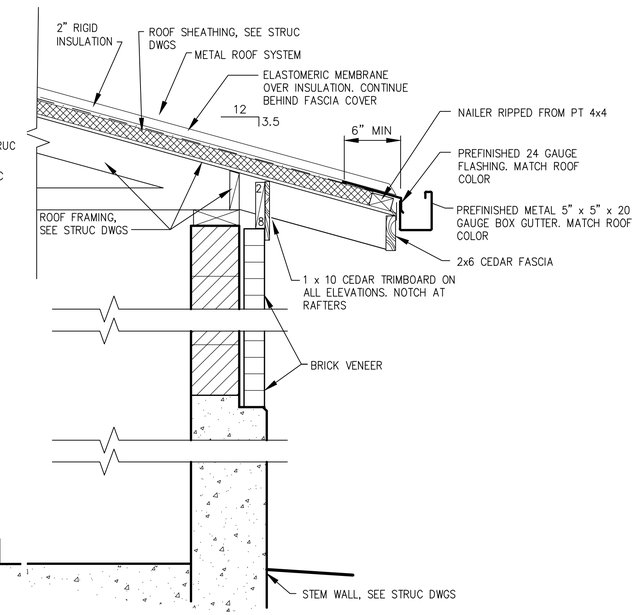

EXTERIOR WALL

SECTION E/A02

SCALE: 1"=1'-0"

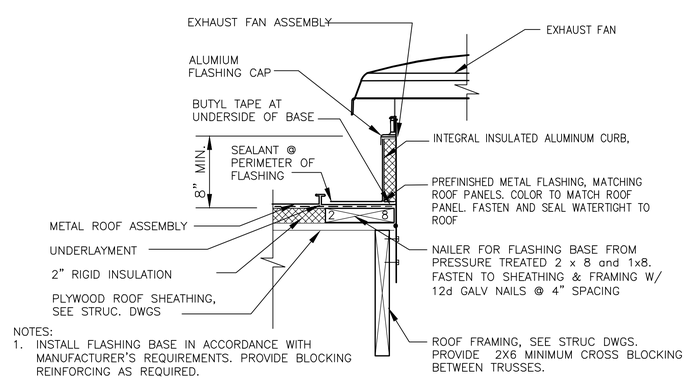

NOTES:
1. INSTALL FLASHING BASE IN ACCORDANCE WITH MANUFACTURER'S REQUIREMENTS. PROVIDE BLOCKING REINFORCING AS REQUIRED.

EXHAUST FAN

DETAIL F/A02

SCALE: 1" = 1'-0"

REGISTERED ARCHITECT
4422
DANIEL J. WRIGHT
Digitally Signed
SAN FRANCISCO, CA
STATE OF OREGON
EXPIRES 12/31/2020

QC REVIEW: _____

DATE: _____

THIS LINE IS 1 INCH
AT FULL SCALE
IF NOT SCALE ACCORDINGLY

SCALE : AS SHOWN
DRAWN BY : DKH/DJW
DESIGNED BY : DJW
PROJ. MGR. : WJM

No.	ZONE	REVISIONS	BY	DATE

WEST YOST ASSOCIATES
4949 Meadows Road
Suite 125
Lake Oswego, Oregon 97035
(503) 451-4500
FAX (530) 756-4991

CITY OF ALBANY
RIVERFRONT INTERCEPTOR SEWER
LIFT STATION AND FORCE MAIN

ELECTRICAL BUILDING
SECTIONS & DETAILS

JOB NUMBER 519-14-18-18
DRAWING NUMBER A03
SHEET NUMBER 27 OF 59
REVISION

P:\Clients\519 City of Albany\14-18-18 Rvrfrnt Intrcptr Wet Wthr LS and FM\CAD\Production\51914-1818_A01-A03.DWG 4/16/2019 2:18 PM jham